FPS



50 HZ VR SERIES

Vertical Multi-Stage Pumps

franklinwater.com

Franklin Electric

Franklin Electric

50 HZ VR SERIES VERTICAL MULTI-STAGE PUMPS

Features 2
Applications 2
Family Curve 3
Pump Specifications 4
Motor Specifications 4
Ordering Information 5
Counter-Flange Kits 5

1 VR 6
Hydraulic Performance 6
Dimensions 7
Performance Curve 8
Power Curve 10

3 VR 12
Hydraulic Performance 12
Dimensions 13
Performance Curve 14
Power Curve 16

6 VR 18
Hydraulic Performance 18
Dimensions 19
Performance Curve 20
Power Curve 22

10 VR 24
Hydraulic Performance 24
Dimensions 25
Performance Curve 26
Power Curve 28

15 VR 30
Hydraulic Performance 30
Dimensions 31
Performance Curve 32
Power Curve 33

20 VR 34
Hydraulic Performance 34
Dimensions 35
Performance Curve 36
Power Curve 37

30 VR 38
Hydraulic Performance 38
Dimensions 39
Performance Curve 40
Power Curve 41

45 VR 42
Hydraulic Performance 42
Dimensions 43
Performance Curve 44
Power Curve 45

65 VR 46
Hydraulic Performance 46
Dimensions 47
Performance Curve 48
Power Curve 49

95 VR 50
Hydraulic Performance 50
Dimensions 51
Performance Curve 52
Power Curve 53

1-3-6-10 VR 54
Materials 54
Main Components 55

15-20 VR 56
Materials 56
Main Components 57

30-45-65-95 VR 58
Materials 58
Main Components 59

Specifications 60
Mechanical Seals 60
Fluids/Materials Compatibility 61
Counter-Flange Dimensions 62

For the most up-to-date product information, visit **franklinwater.com**.

FEATURES

- All stainless steel hydraulics for superior durability, efficiency, and performance over a wide variety of applications.
- Rugged motor mounting with oversized ball bearings ensure long operating life in the toughest jobs. Heavy-duty motor bearing not required.
- Standard mechanical seal provides superior sealing between water end and motor; balanced version available (30-45-65-95 VR).
- Removal of the mechanical seal without dismounting the motor (motors ≥ 4 kW; 2-piece coupling).
- Removal of the mechanical seal with motor removal without pump disassembly (motors 0.37-4 kW).
- In-line suction and discharge with round flanges fit the widest range of applications and provide convenient, compact installation.
- Rugged IEC mount electric motors produced to European and AU/NZ market standards.
- Replaceable stainless steel wear ring in the neck of the impeller (30-45-65-95 VR).
- Premium efficiency three-phase motors conforming to the higher efficiency standards for Europe, North America, and Australia. IE3 code Premium Efficiency.
- Made in Italy.



AVAILABLE UPON REQUEST*

- N-type AISI 316 versions (1-3-6-10-15-20-30-45-65-95 VR)
- G-type cast iron pump casing and AISI 304 (30-45-65-95 VR)
- 15-20 VR available in N-type AISI 316 SS only
- Special materials for seals, gaskets, and elastomers
- H-type AISI 304 versions (1-3-6-10-30-45-65-95 VR)
- Oval flange (T), Victaulic (V) and Clamp (C) available (1-3-6-10-15-20 VR)
- IE2 code High Efficiency (comparable to EFF1) available

** May require special order; consult Franklin for details.*

APPLICATIONS

- Pressure boosting
- Boiler feed
- Water supply and treatment
- Reverse osmosis
- Wash down units
- Hot/cold water circulation for HVAC systems
- Irrigation

Franklin Electric

FAMILY CURVE

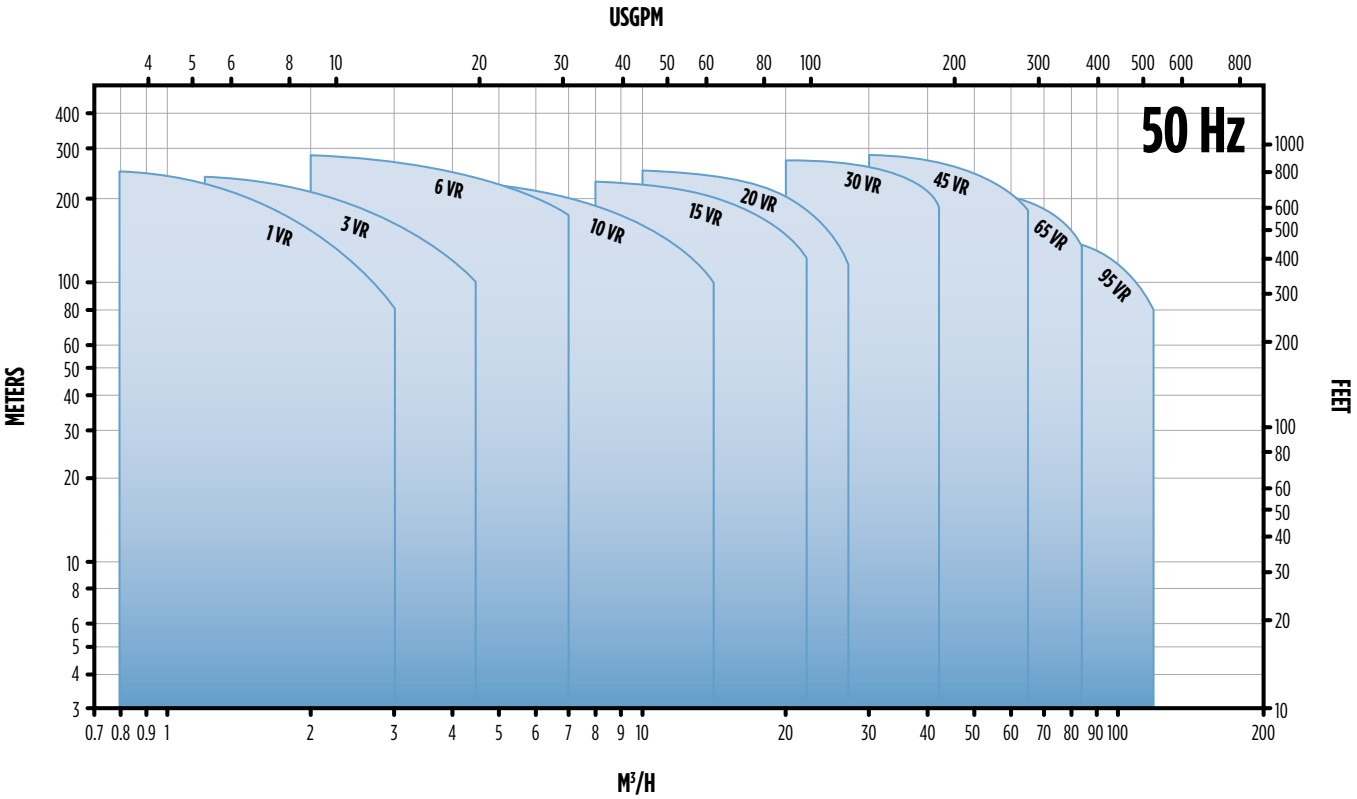

MODEL NOMENCLATURE

CODE FOR PUMP END

XX VR XX - XX - X - X

Construction
G = Standard
H = 304/316 SS
N = 316 SS

Connections*
F = Round Flange
T = Oval Flange
V = Victaulic
C = Clamp
** T, V, and C connections only on 1-3-6-10-15-20 VR*

Reduced Impeller Trim Type
00 = No Trim
1A = Trim (30-45-65-95 VR)
2A = Trim (30-45-65-95 VR)

Total Number of Stages (2 Characters)

Pump Series (VR)

Nominal Flow
1 = 1 m^3/h 3 = 3 m^3/h 6 = 6 m^3/h 10 = 10 m^3/h
15 = 15 m^3/h 20 = 20 m^3/h 30 = 30 m^3/h 45 = 45 m^3/h
65 = 65 m^3/h) 95 = 95 m^3/h)

PUMP SPECIFICATIONS

- Standard AISI 304 SS hydraulics
- Capacities up to 120 m^3/h
- Heads up to 30 Bar
- Liquid temperature range of -15 °C to +120 °C
- Standard round flanges on body type PN25 (30-45-65-95 VR); counter-flanges and fastener kits available upon request
- Materials suitable for handling drinking water (WRAS certified)
- Hydraulic characteristics are according to ISO Standard 9906, grade 3
- PPS (1-3-6-10 VR) PTFE (15-20-30-45-65-95 VR) WRAS certified replacement floating neck ring for cost effective maintenance and long-lasting performance
- Tungsten carbide intermediate bearing to control and eliminate vibration and stabilize the rotor with a large number of stages
- Diffuser bushing made of carbon for durability against dry running (30-45-65-95 VR)
- Shaft bearing and journal sleeve made of tungsten carbide
- Replaceable stainless steel wear ring in the neck of the impeller (30-45-65-95 VR)
- Conforms to pump curve standards MEI ≥ 0.70, under Minimum Efficiency Index EU 547/2012

PUMP VERSIONS

Versions	Casing/ Hydraulics	1 VR	3 VR	6 VR	10 VR	15 VR	20 VR	30 VR	45 VR	65 VR	95 VR
H	AISI 304/AISI 304	X	X	X	X	-	-	XX	XX	XX	XX
G	CAST IRON/AISI 304	-	-	-	-	-	-	X	X	X	X
N	AISI 316/AISI 316	X	X	X	X	X	X	X	X	X	X

X = Standard Version. XX = Available upon request.

MOTOR SPECIFICATIONS

- Squirrel cage, TEFC, induction motors
- Clockwise rotation when looking at the pump from above
- 71 frame aluminum alloy and the larger sizes are cast iron (3-phase)
- Performance in compliance with MEPS AS/NZS1359.5-2004 to Table B2 where applicable (3-phase)
- Ambient temperature of -20 °C to +40 °C
- External thermal overload protection for motors up to 7.5 kW. 11 kW and above have thermistors fitted
- IP55 protection
- Class F insulation; Class B temperature rise
- Voltage: 230 V 50 Hz (1-phase); 230/400 V up to 3 kW, 400/690 V from 4 kW and above (3-phase)
- Conforming to the latest higher efficiency standards for Europe, North America, and Australia. IE3 code = Premium Efficiency (standard); IE2 code = High Efficiency (comparable to EFF1) available

NOTE: Specifications subject to change without prior notice.

MAXIMUM WORKING PRESSURE

Models	1 VR	3 VR	6 VR	10 VR	15 VR	20 VR	30 VR	45 VR	65 VR	95 VR
T-Version (Oval)	16	16	16	16	16	16	-	-	-	-
F-/V-/C-Version	26	26	26	26	26	26	-	-	-	-
F-Version (PN16)	-	-	-	-	-	-	16	16	16	16
F-Version (PN25/40)	-	-	-	-	-	-	32	32	25	25
Maximum Inlet Pressure (H1)	Refer to hydraulic performance tables									

NOTES: The inlet pressure of the pump plus the pressure of the water inside the pump cannot exceed the maximum working pressure. All pressure values are in bar.

Franklin Electric

ORDERING INFORMATION

Order No.	Description	kW	HP	PH	50 Hz Volts*	60 Hz Volts*	Wiring		Size	Mounting
							Standard 380-415	Optional 220-240		
106618104	VR Motor-1.1/50/1	1.1	1.5	1	240	-	-	-	80	B14
106618105	VR Motor-1.5/50/1	1.5	2	1	240	-	-	-	90	B14
106618106	VR Motor-2.2/50/1	2.2	3	1	240	-	-	-	90	B14
106618304	VR Motor-1.1/50/3	1.1	1.5	3	230/400	440/460	Star	Delta	80	B14
106618305	VR Motor-1.5/50/3	1.5	2	3	230/400	440/460	Star	Delta	90	B14
106618306	VR Motor-2.2/50/3	2.2	3	3	230/400	440/460	Star	Delta	90	B14
106618307	VR Motor-3.0/50/3	3	4	3	230/400	440/460	Star	Delta	100	B14
106618308	VR Motor-4.0/50/3	4	5.5	3	400/690	440/460	Delta	-	112	B14
106618309	VR Motor-5.5/50/3	5.5	7.5	3	400/690	440/460	Delta	-	132	B5
106618310	VR Motor-7.5/50/3	7.5	10	3	400/690	440/460	Delta	-	132	B5
106618311	VR Motor-9.2/50/3	9.2	12.5	3	400/690	440/460	Delta	-	132	B5
106618312	VR Motor-11.0/50/3	11	15	3	400/690	440/460	Delta	-	160	B5
106618313	VR Motor-15.0/50/3	15	20	3	400/690	440/460	Delta	-	160	B5
106618314	VR Motor-18.5/50/3	18.5	25	3	400/690	440/460	Delta	-	160	B5
106618315	VR Motor-22.0/50/3	22	30	3	400/690	440/460	Delta	-	180	B5
106618316	VR Motor-30.0/50/3	30	40	3	400/690	440/460	Delta	-	200	B5
106618317	VR Motor-37.0/50/3	37	50	3	400/690	440/460	Delta	-	200	B5
106618318	VR Motor-45.0/50/3	45	60	3	400/690	440/460	Delta	-	225	B5

** Three-phase motors are dual voltage/dual frequency, 50/60 Hz.*

COUNTER-FLANGE KITS

Item	Description	PN Rating	For Use With
14261004	Kit Counter-Flanges F DN50 Zinc Galvanized	PN 25	15-20 VR
14262004	Kit Counter-Flanges F DN50 AISI 304	PN 25	15-20 VR
14262014	Kit Counter-Flanges F DN50 AISI 316	PN 25	15-20 VR
14262050	Kit Counter-Flanges T DN16 AISI 304*	PN 16	15-20 VR
14262051	Kit Counter-Flanges T DN16 AISI 304**	PN 16	15-20 VR
14261007	Kit Counter-Flanges F DN65 Zinc Galvanized	PN 16	30 VR
14262017	Kit Counter-Flanges F DN65 AISI 316	PN 16	30 VR
14261010	Kit Counter-Flanges F DN65 AISI 316 To Be Welded	PN 25/40	30 VR
14261008	Kit Counter-Flanges F DN80 Zinc Galvanized	PN 16	45 VR
14262018	Kit Counter-Flanges F DN80 AISI 316	PN 16	45 VR
14261011	Kit Counter-Flanges F DN80 AISI 316 To Be Welded	PN 25/40	45 VR
14261009	Kit Counter-Flanges F DN100 Zinc Galvanized	PN 16	65-95 VR
14262019	Kit Counter-Flanges F DN100 AISI 316	PN 16	65-95 VR
14261012	Kit Counter-Flanges F DN100 AISI 316 To Be Welded	PN 25/40	65-95 VR

NOTE: Counter-flange kits include: flanges (2), gaskets (2), bolts/nuts (16)

** = Thread GAS male*

*** = Thread female*

1 VR - HYDRAULIC PERFORMANCE

Model	Rated Power		H1	Stages	Delivery					
					l/min - 0	8.3	16.7	25.0	33.3	42
	kW	HP	Bar		m^3/h - 0	0.5	1	1.5	2	2.5
					H = Total Head Column of Water (Meters)					
1VR02	0.37	0.5	20	2	14.5	13.5	12.5	11.5	9.5	7.5
1VR03	0.37	0.5		3	21.5	20	19	17	14	11
1VR04	0.37	0.5		4	28	26.5	24.5	22	18.5	14
1VR05	0.37	0.5		5	35	33	30.5	27	22.5	17
1VR06	0.37	0.5		6	41.5	39	36	32	26.5	19.5
1VR07	0.37	0.5		7	48	45	41.5	36.5	30	22
1VR08	0.55	0.75		8	55	52	48	42.5	35	26
1VR09	0.55	0.75		9	61.5	58	53	47	39	28.5
1VR10	0.55	0.75		10	68	64	58.5	51.5	43	31.5
1VR11	0.55	0.75		11	74.5	69.5	64	56.5	46.5	34
1VR12	0.75	1		12	83	78.5	72	64	53	39.5
1VR13	0.75	1		13	89.5	84.5	77.5	68.5	57	42
1VR14	0.75	1		14	96	90.5	83	73	60.5	44.5
1VR15	0.75	1		15	102.5	96	88	78	64	47
1VR17	1.1	1.5		17	118	111.5	103	91.5	76	56.5
1VR19	1.1	1.5		19	131	123.5	114	101	84	62
1VR22	1.1	1.5		22	150.5	141.5	130	115	95	69.5
1VR23	1.5	2		23	160.5	152	140	124.5	104	77.5
1VR25	1.5	2		25	174	164	151.5	134.5	112	83.5
1VR27	1.5	2		27	187	176.5	162.5	144	120	88.5
1VR30	1.5	2		30	206.5	194.5	179	158	131	96.5
1VR32	2.2	3		32	224.5	213	197	175.5	147.5	110.5
1VR34	2.2	3		34	238	225.5	208.5	185.5	155.5	116.5
1VR37	2.2	3		37	258	244	225.5	200.5	167.5	125

Franklin Electric

1 VR - DIMENSIONS

F-VERSION

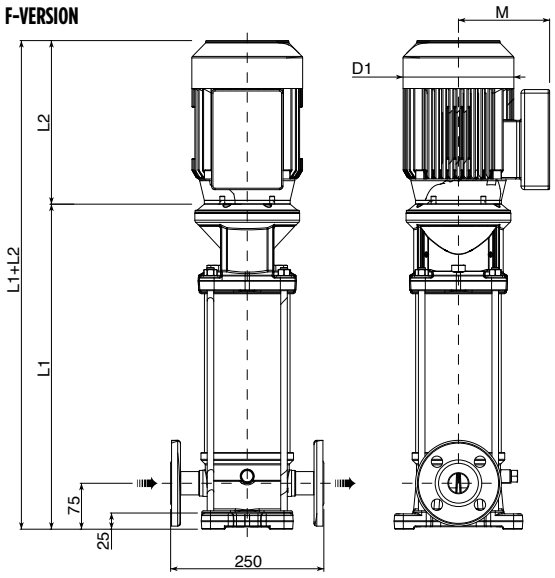

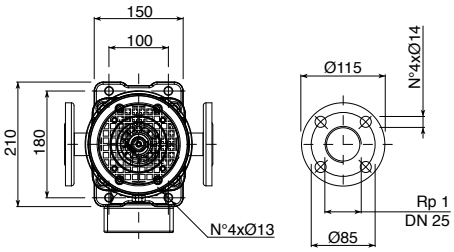

V-VERSION

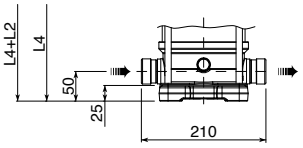

T-VERSION

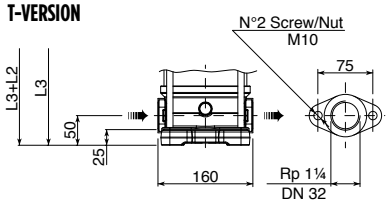

C-VERSION

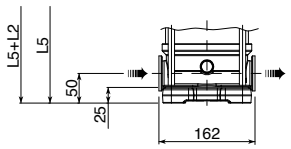

F-Version: Round flanges on body type PN25; pump is supplied without counter-flanges (optional accessories, including bolts and joints).
T-Version: Oval flanges on body type PN16; pump is supplied without threaded oval counter-flanges (optional accessories, including bolts and joints).
V-Version: Connections with rapid fittings type "Victaulic"; pump is supplied without the collars (optional accessories).
C-Version: Connections with round fittings type Clamp-FlexiClamp; pump is supplied without collars (optional accessories).

Model	Motor				Dimensions (mm)									Weight (kg)		
	Rated Power		Size	MTG	L1	L2		L1+L2	M		D1		D2	PE	Motor	PMA
	kW	HP				1-PH	3-PH		1-PH	3-PH	1-PH	3-PH				
1VR02	0.37	0.5	71	B14	312.5	215	215	527.5	129	112	142	142	170	15	5.8	20.8
1VR03	0.37	0.5	71		335	215	215	550	129	112	142	142	170	15	5.8	20.8
1VR04	0.37	0.5	71		357.5	215	215	572.5	129	112	142	142	170	15.5	5.8	21.3
1VR05	0.37	0.5	71		380	215	215	595	129	112	142	142	170	16	5.8	21.8
1VR06	0.37	0.5	71		402.5	215	215	617.5	129	112	142	142	170	16.5	5.8	22.3
1VR07	0.37	0.5	71		425	215	215	640	129	112	142	142	170	17	5.8	22.8
1VR08	0.55	0.75	71		447.5	215	215	662.5	129	112	142	142	170	17.5	6.2	23.7
1VR09	0.55	0.75	71		470	215	215	685	129	112	142	142	170	18	6.2	24.2
1VR10	0.55	0.75	71		492.5	215	215	707.5	129	112	142	142	170	18.5	6.2	24.7
1VR11	0.55	0.75	71		515	215	215	730	129	112	142	142	170	19	6.2	25.2
1VR12	0.75	1	80		537.5	232	232	769.5	150	129	160	160	170	19.5	9.5	29
1VR13	0.75	1	80		560	232	232	792	150	129	160	160	170	20	9.5	29.5
1VR14	0.75	1	80		582.5	232	232	814.5	150	129	160	160	170	20.5	9.5	30
1VR15	0.75	1	80		605	232	232	837	150	129	160	160	170	21	9.5	30.5
1VR17	1.1	1.5	80		650	232	232	882	150	129	160	160	170	22	11.1	33.1
1VR19	1.1	1.5	80		695	232	232	927	150	129	160	160	170	22.5	11.1	33.6
1VR22	1.1	1.5	80		762.5	232	232	994.5	150	129	160	160	170	24	11.1	35.1
1VR23	1.5	2	90		795	267	267	1062	160	138	180	180	170	25	14	39
1VR25	1.5	2	90		840	267	267	1107	160	138	180	180	170	26	14	40
1VR27	1.5	2	90		885	267	267	1152	160	138	180	180	170	27	14	41
1VR30	1.5	3	90		952.5	267	267	1219.5	160	138	180	180	170	28.5	14	42.5
1VR32	2.2	3	90		997.5	267	267	1264.5	160	138	180	180	170	29	16	45
1VR34	2.2	3	90		1042.5	267	267	1309.5	160	138	180	180	170	30	16	46
1VR37	2.2	3	90		1110	267	267	1377	160	138	180	180	170	31.5	16	47.5

1 VR - PERFORMANCE CURVE

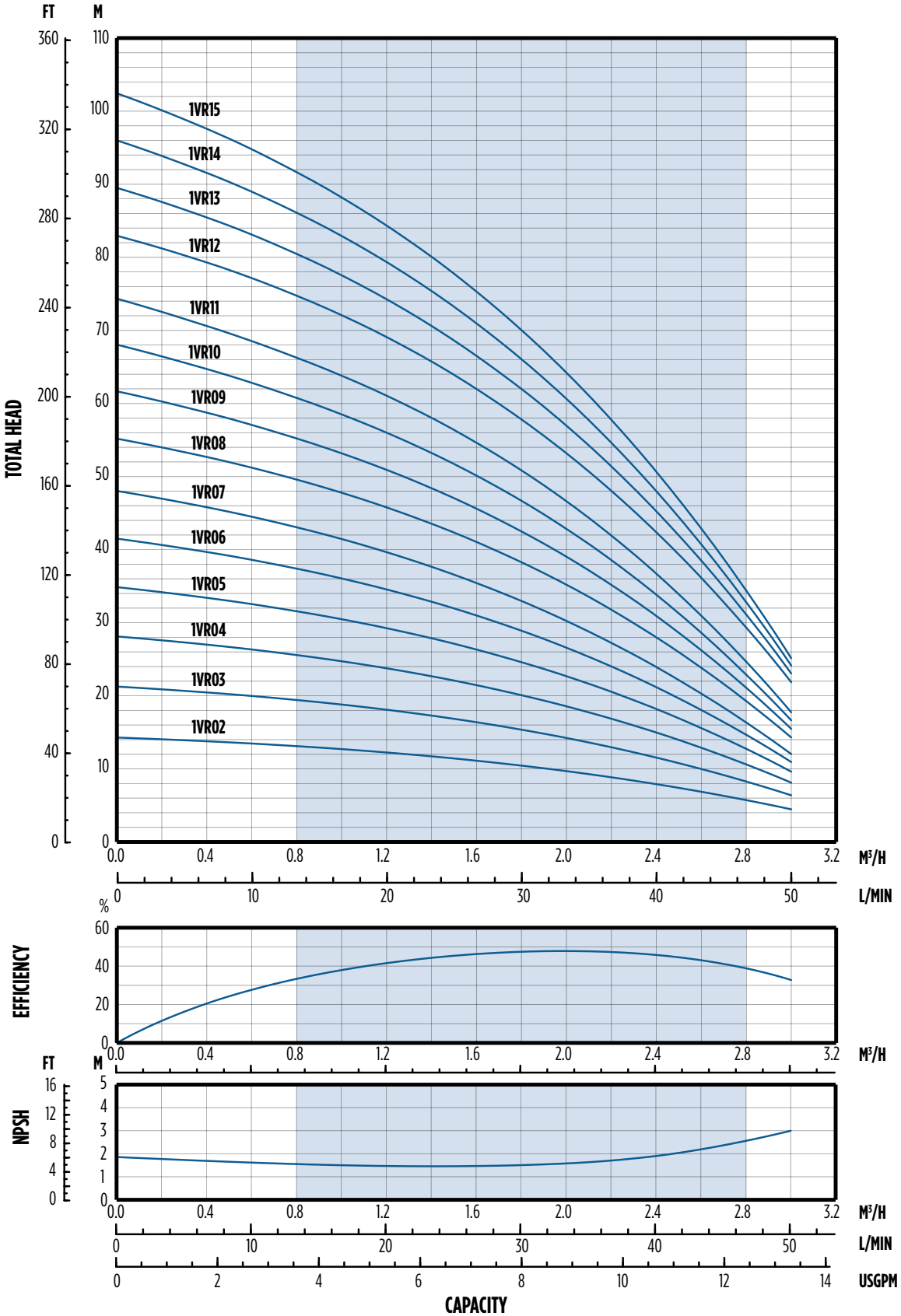

NOTE: Specifications subject to change without prior notice. Hydraulic characteristics are according to ISO standard 9906, Annex A.

Franklin Electric

1 VR - PERFORMANCE CURVE

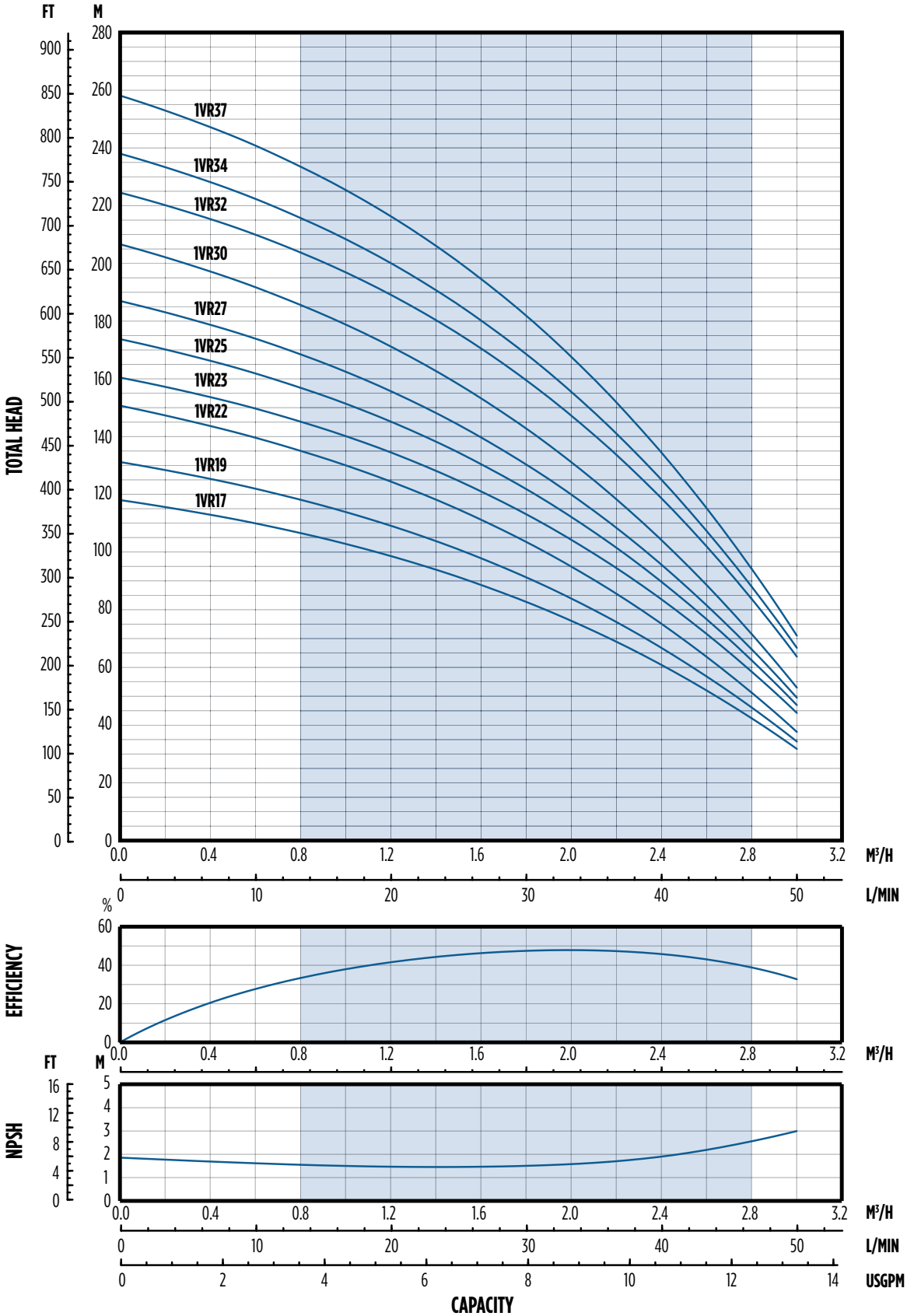

NOTE: Specifications subject to change without prior notice. Hydraulic characteristics are according to ISO standard 9906, Annex A.

1 VR - POWER CURVE

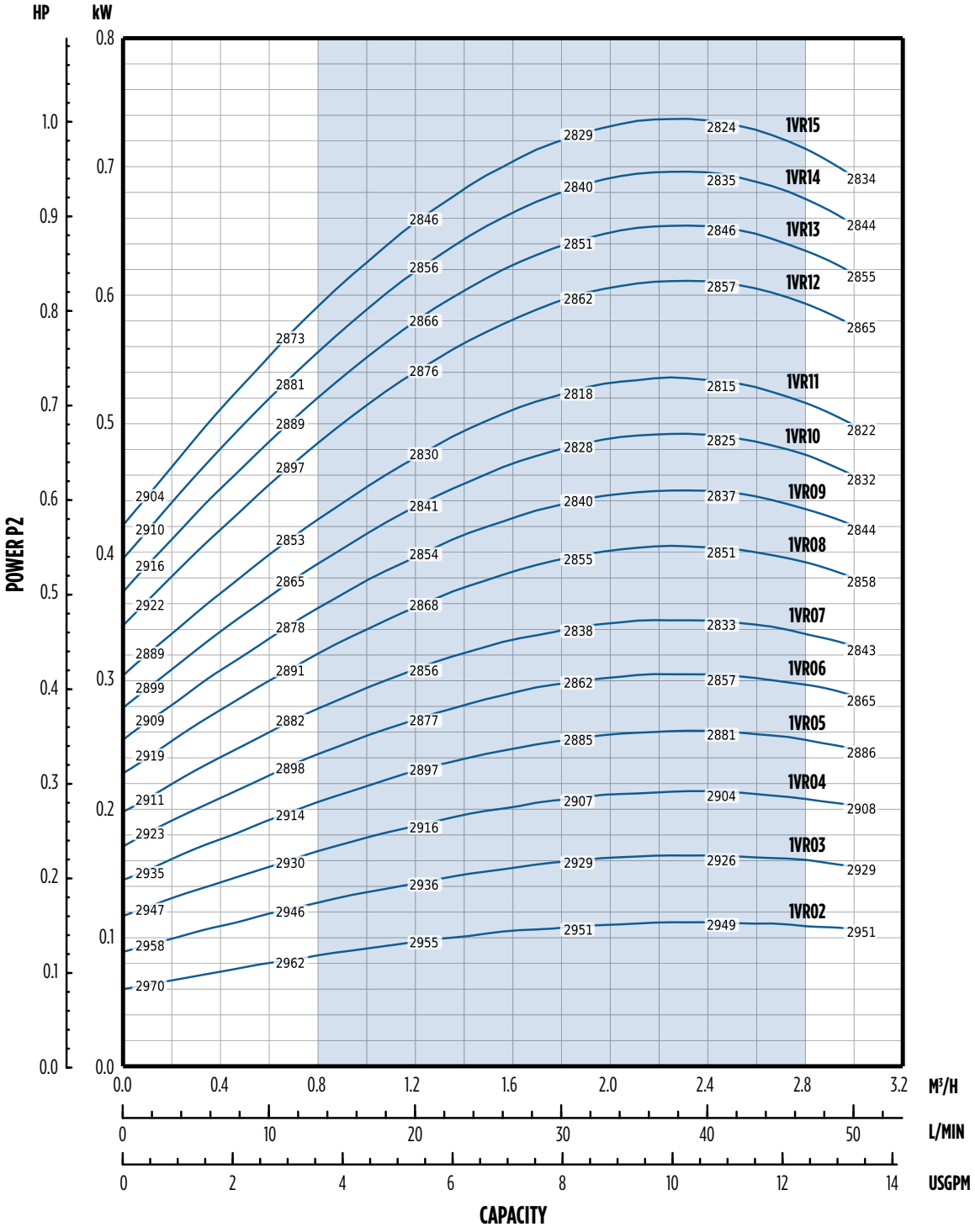

NOTE: Specifications subject to change without prior notice.

Franklin Electric

1 VR - POWER CURVE

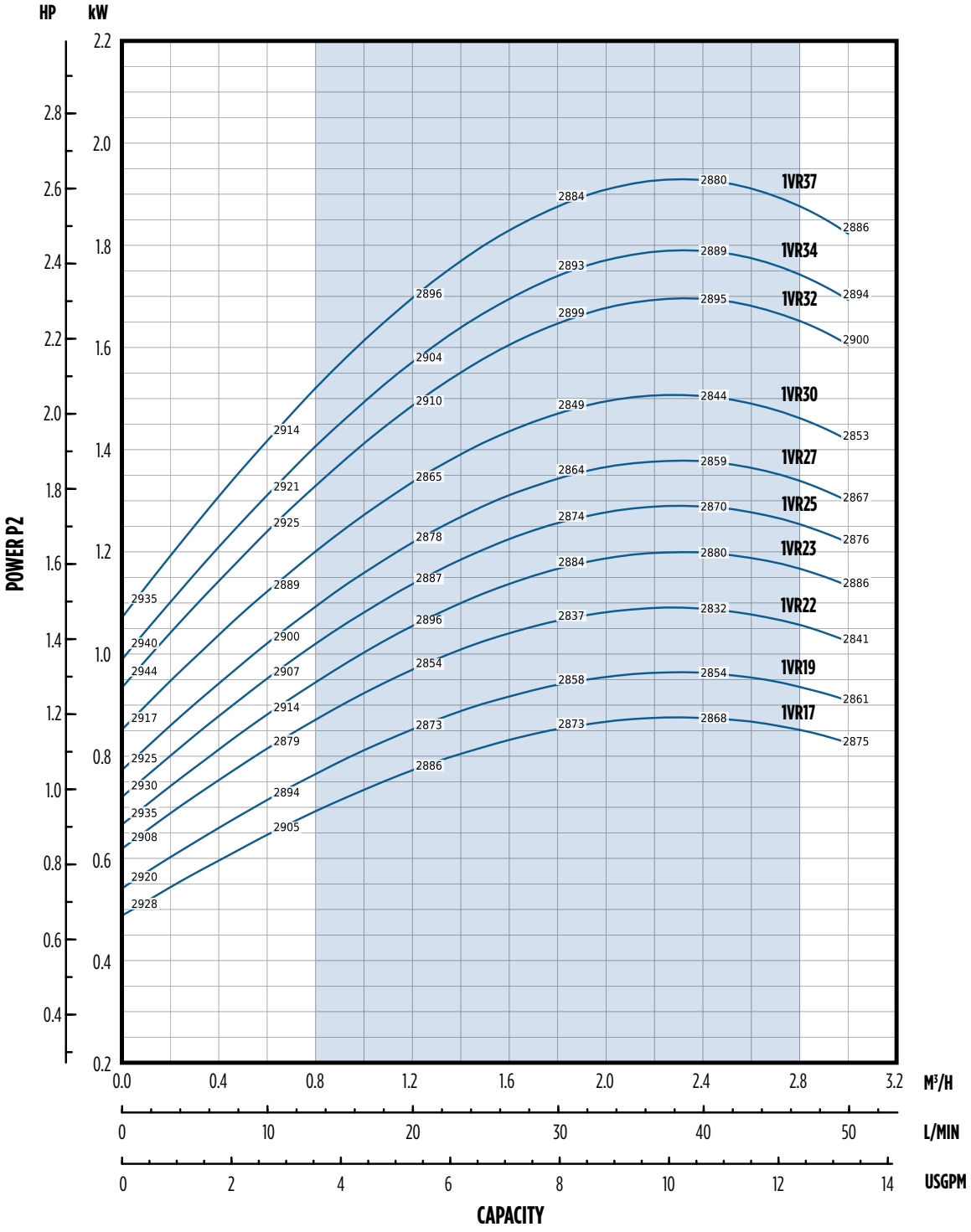

NOTE: Specifications subject to change without prior notice.

3 VR - HYDRAULIC PERFORMANCE

Model	Rated Power		H1	Stages	Delivery								
					l/min - 0	16.7	25.0	33.3	42	50	58.3	67	75
	kW	HP	Bar		m^3/h - 0	1	1.5	2	2.5	3	3.5	4	4.5
					H = Total Head Column of Water (Meters)								
3VR02	0.37	0.5		2	15	15	14.5	13.5	12.5	11.5	10	8	6
3VR03	0.37	0.5		3	22.5	22	21	20	18.5	17	14.5	12	8.5
3VR04	0.37	0.5		4	30	28.5	27.5	26	24	21.5	18.5	15	10.5
3VR05	0.55	0.75		5	37.5	36	34.5	32.5	30	27	23.5	18.5	13
3VR06	0.55	0.75		6	44.5	42.5	40.5	38.5	35.5	32	27	21.5	15
3VR07	0.75	1		7	52.5	50.5	48.5	46	43	38.5	33	26.5	19
3VR08	0.75	1		8	59.5	57.5	55	52	48	43.5	37	29.5	21
3VR09	0.75	1		9	67	64	61.5	58	53.5	48	41	32.5	22.5
3VR10	1.1	1.5		10	75	72.5	70	66.5	61.5	55.5	48	38.5	27.5
3VR11	1.1	1.5		11	82.5	79.5	76.5	72.5	67	60.5	52	42	29.5
3VR12	1.1	1.5		12	89.5	86	83	78.5	72.5	65	56	45	31.5
3VR13	1.1	1.5		13	96.5	93	89	84.5	78	70	60	47.5	33.5
3VR14	1.5	2	20	14	105.5	102	98.5	93.5	86.5	78	67.5	54.5	39.5
3VR15	1.5	2		15	112.5	109	105	99.5	92.5	83	71.5	58	41.5
3VR16	1.5	2		16	120	115.5	111.5	105.5	98	88	76	61	43.5
3VR17	1.5	2		17	127	122.5	118	111.5	103.5	93	80	64	45.5
3VR18	2.2	3		18	136.5	132.5	128	121.5	113.5	102.5	89	72.5	53
3VR19	2.2	3		19	144	139.5	134.5	128	119	107.5	93.5	76	55.5
3VR21	2.2	3		21	158.5	153.5	148	140.5	130.5	118	102	83	60
3VR23	2.2	3		23	173	167.5	161.5	153	142	128	110.5	89.5	64.5
3VR25	2.2	3		25	187.5	181	174.5	165.5	153.5	138	119	96	68.5
3VR27	3	4		27	205.5	199.5	193	184	171.5	155	135	110.5	81
3VR29	3	4		29	220	213.5	206.5	196.5	183.5	166	144	117.5	86
3VR31	3	4		31	235	228	220.5	209.5	195	176.5	153	124.5	91
3VR33	3	4		33	249.5	242	234	222	206.5	187	162	131.5	95.5

Franklin Electric

3 VR - DIMENSIONS

F-VERSION

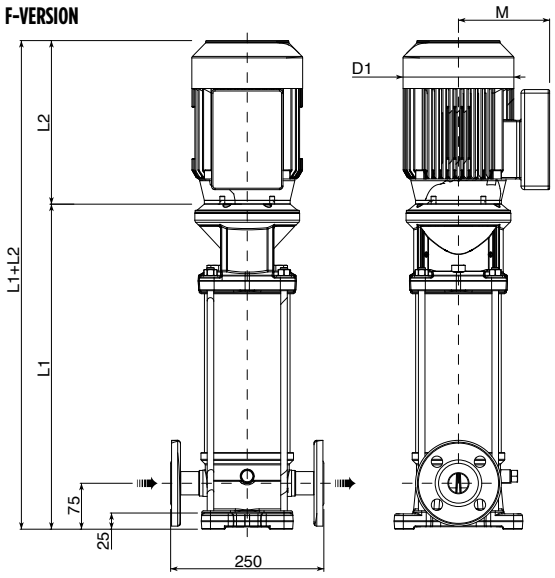

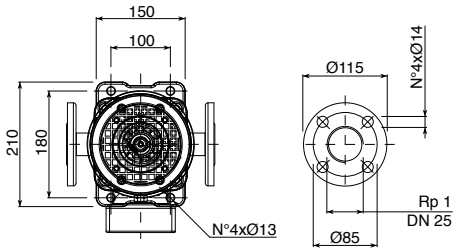

V-VERSION

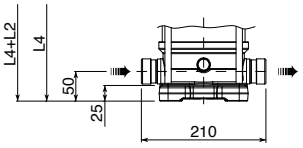

T-VERSION

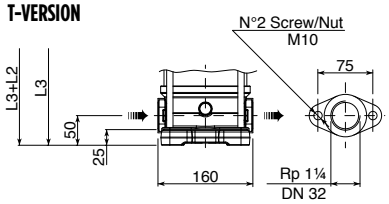

C-VERSION

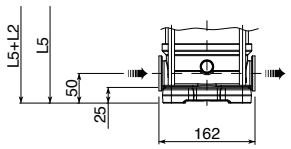

F-Version: Round flanges on body type PN25; pump is supplied without counter-flanges (optional accessories, including bolts and joints).
T-Version: Oval flanges on body type PN16; pump is supplied without threaded oval counter-flanges (optional accessories, including bolts and joints).
V-Version: Connections with rapid fittings type "Victaulic"; pump is supplied without the collars (optional accessories).
C-Version: Connections with round fittings type Clamp-FlexiClamp; pump is supplied without collars (optional accessories).

Model	Motor				Dimensions (mm)									Weight (kg)		
	Rated Power		Size	MTG	L1	L2		L1+L2	M		D1		D2	PE	Motor	PMA
	kW	HP				1-PH	3-PH		1-PH	3-PH	1-PH	3-PH				
3VR02	0.37	0.5	71		312.5	215	215	527.5	129	112	142	142	170	15	5.8	20.8
3VR03	0.37	0.5	71		335	215	215	550	129	112	142	142	170	15	5.8	20.8
3VR04	0.37	0.5	71		357.5	215	215	572.5	129	112	142	142	170	15.5	5.8	21.3
3VR05	0.55	0.75	71		380	215	215	595	129	112	142	142	170	16	6.2	22.2
3VR06	0.55	0.75	71		402.5	215	215	617.5	129	112	142	142	170	16.5	6.2	22.7
3VR07	0.75	1	80		425	232	232	657	150	129	160	160	170	17	9.5	26.5
3VR08	0.75	1	80		447.5	232	232	679.5	150	129	160	160	170	17.5	9.5	27
3VR09	0.75	1	80		470	232	232	702	150	129	160	160	170	18	9.5	27.5
3VR10	1.1	1.5	80		492.5	232	232	724.5	150	129	160	160	170	18.5	11.1	29.6
3VR11	1.1	1.5	80		515	232	232	747	150	129	160	160	170	19	11.1	30.1
3VR12	1.1	1.5	80		537.5	232	232	769.5	150	129	160	160	170	19.5	11.1	30.6
3VR13	1.1	1.5	80		560	232	232	792	150	129	160	160	170	20	11.1	31.1
3VR14	1.5	2	90	B14	592.5	267	267	859.5	160	138	180	180	170	21	14	35
3VR15	1.5	2	90		615	267	267	882	160	138	180	180	170	21.5	14	35.5
3VR16	1.5	2	90		637.5	267	267	904.5	160	138	180	180	170	22	14	36
3VR17	1.5	2	90		660	267	267	927	160	138	180	180	170	22.5	14	36.5
3VR18	2.2	3	90		682.5	267	267	949.5	160	138	180	180	170	23	16	39
3VR19	2.2	3	90		705	267	267	972	160	138	180	180	170	23.5	16	39.5
3VR21	2.2	3	90		750	267	267	1017	160	138	180	180	170	24	16	40
3VR23	2.2	3	90		795	267	267	1062	160	138	180	180	170	25	16	41
3VR25	2.2	3	90		840	267	267	1107	160	138	180	180	170	26	16	42
3VR27	3	4	100		895	-	290	1185	-	138	-	180	170	27.5	18	45.5
3VR29	3	4	100		940	-	290	1230	-	138	-	180	170	28.5	18	46.5
3VR31	3	4	100		985	-	290	1275	-	138	-	180	170	29.5	18	47.5
3VR33	3	4	100		1030	-	290	1320	-	138	-	180	170	30.5	18	48.5

3 VR - PERFORMANCE CURVE

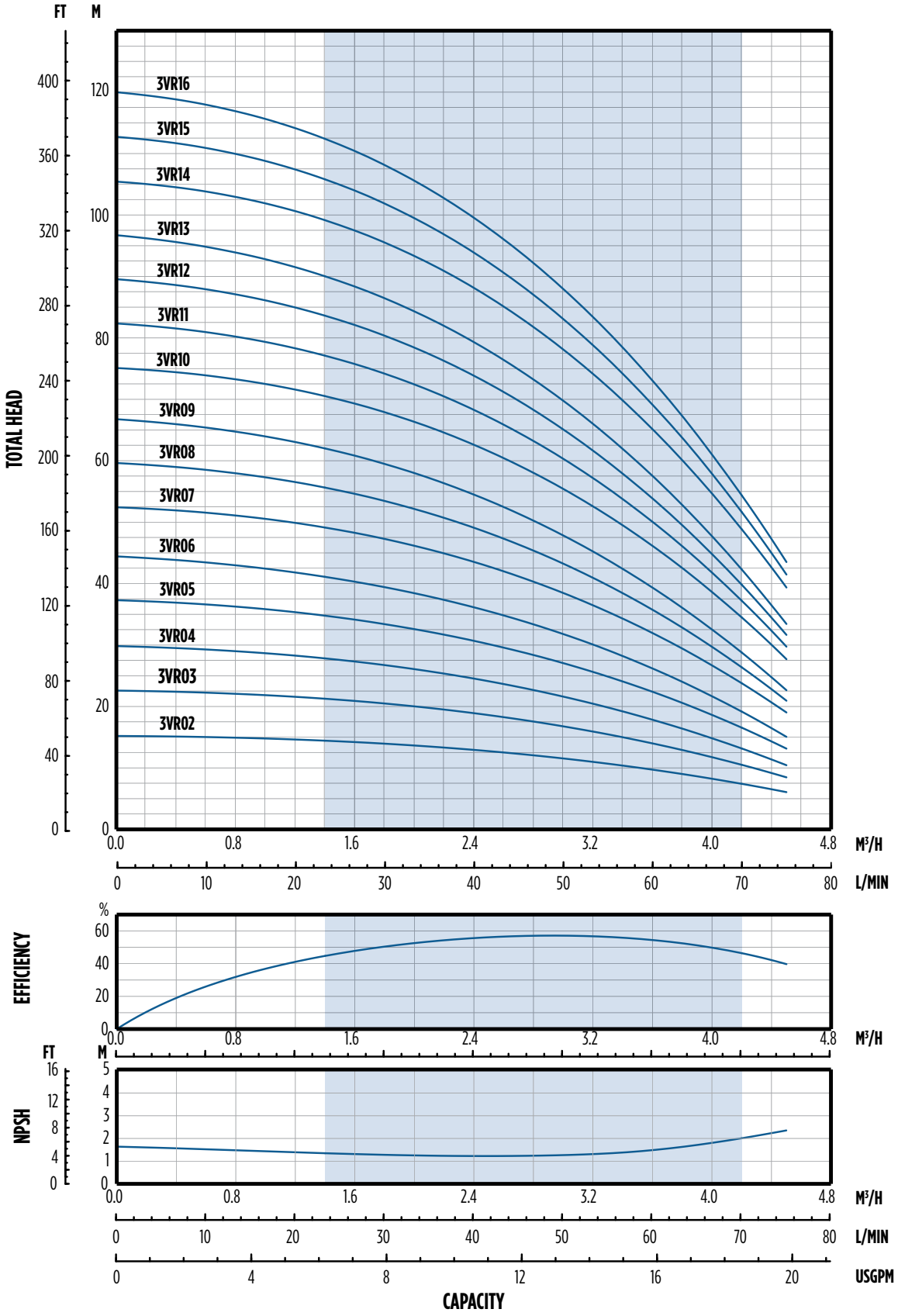

NOTE: Specifications subject to change without prior notice. Hydraulic characteristics are according to ISO standard 9906, Annex A.

Franklin Electric

3 VR - PERFORMANCE CURVE

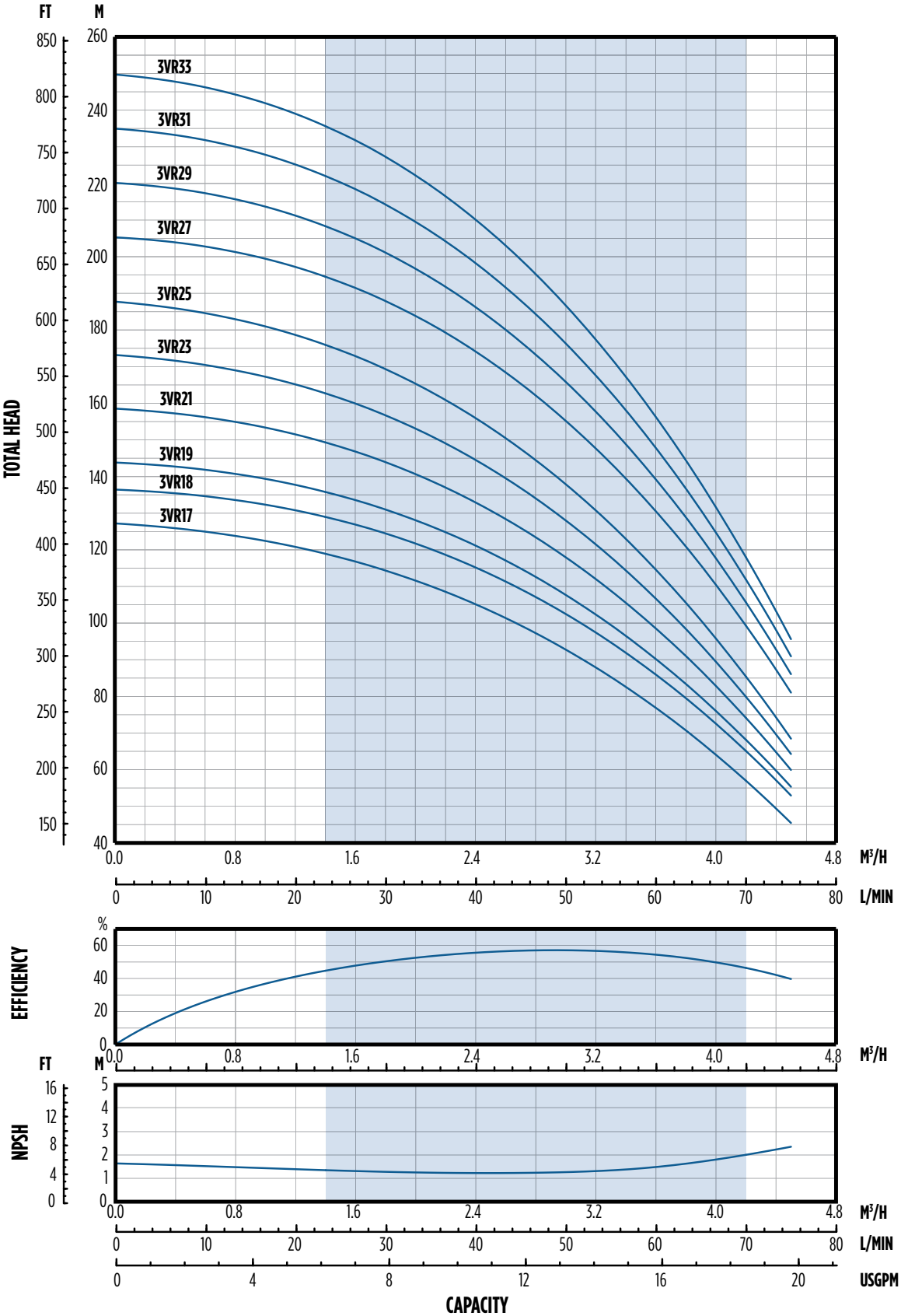

NOTE: Specifications subject to change without prior notice. Hydraulic characteristics are according to ISO standard 9906, Annex A.

3 VR - POWER CURVE

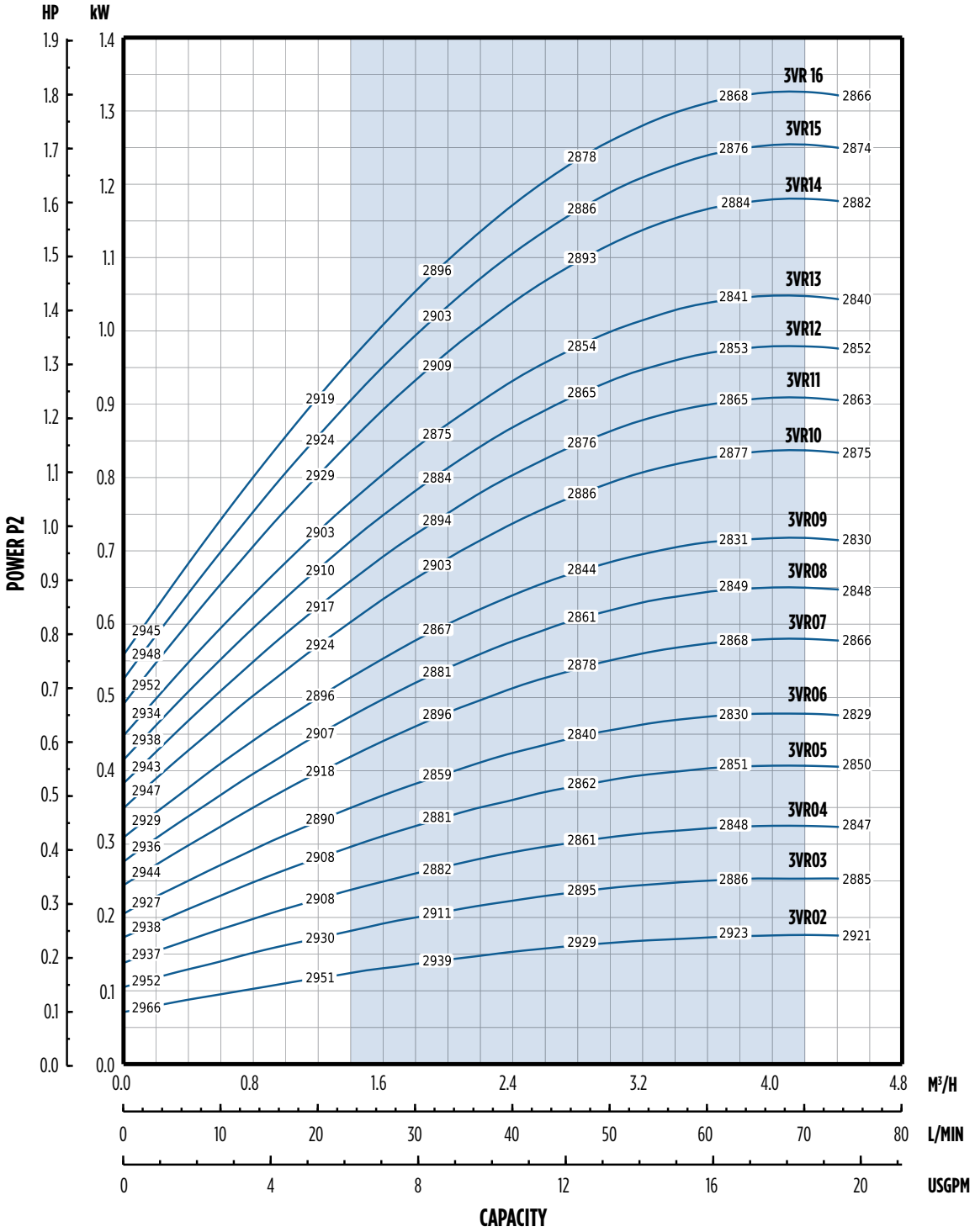

NOTE: Specifications subject to change without prior notice.

Franklin Electric

3 VR - POWER CURVE

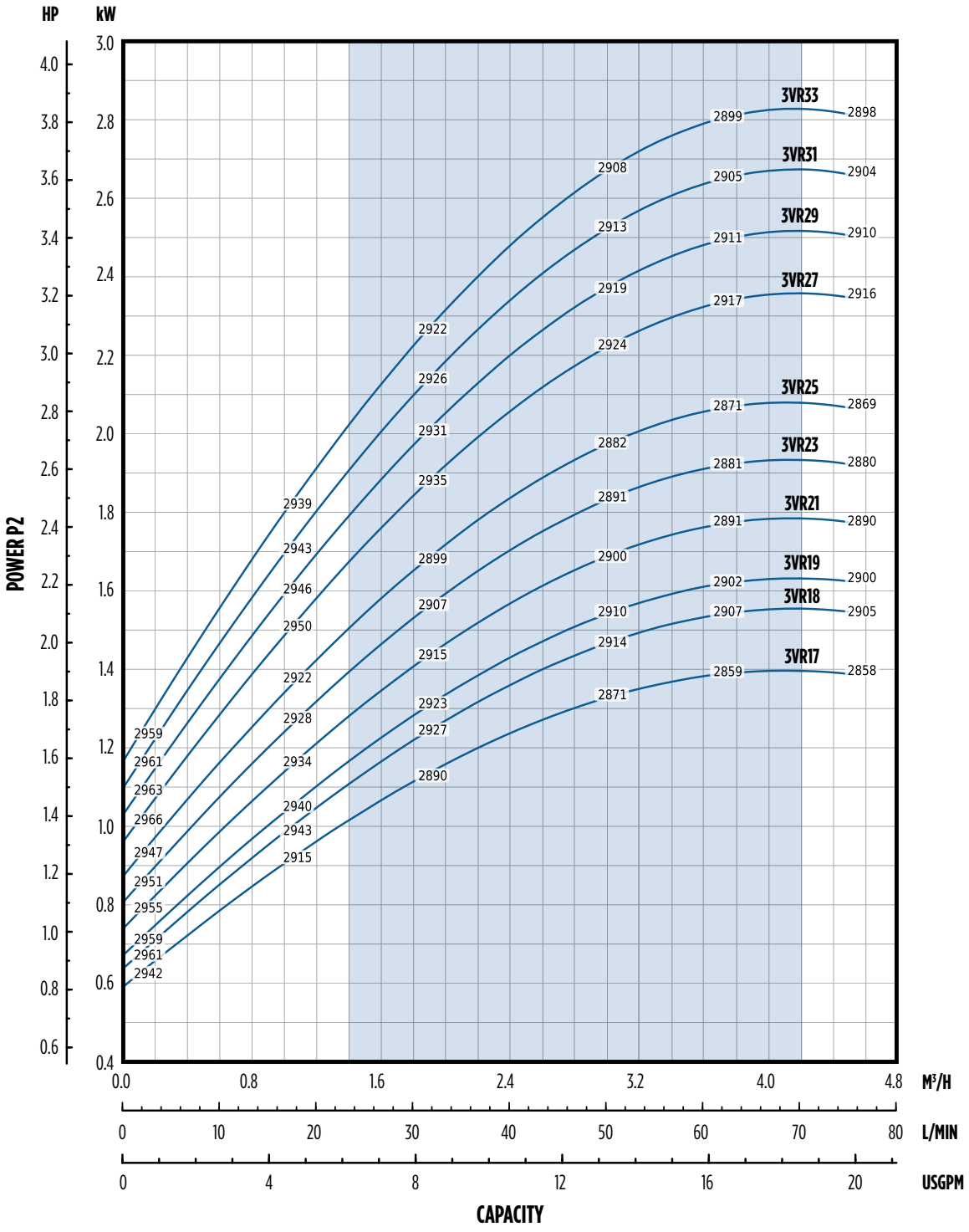

NOTE: Specifications subject to change without prior notice.

6 VR - HYDRAULIC PERFORMANCE

Model	Rated Power		HI	Stages	Delivery												
					l/min - 0	16.7	25	33.3	42	50	58.3	67	75	83.3	90	100	116.7
	kW	HP	Bar		m^3/h - 0	1	1.5	2	2.5	3	3.5	4	4.5	5	5.4	6	7
					H = Total Head Column of Water (Meters)												
6VR02	0.37	0.5		2	15	15	14.5	14.5	14	13.5	13	12.5	12	11.5	11	10	8
6VR03	0.37	0.5		3	22.5	22	21.5	21	20.5	19.5	19	18	17	16	15.5	14	11
6VR04	0.55	0.75		4	29.5	29	28.5	28	27	26	25	24	22.5	21.5	20.5	18.5	14.5
6VR05	0.75	1		5	37.5	37	36.5	35.5	34.5	33.5	32	30.5	29	27.5	26	24	19
6VR06	0.75	1		6	44.5	43.5	43	42	41	39.5	37.5	36	34	32.5	30.5	28	22
6VR07	1.1	1.5		7	52.5	51.5	51.5	50.5	49	47	45	43	41	39	37	34	27
6VR08	1.1	1.5		8	59.5	58.5	58	57	55	53.5	51	48.5	46.5	44	42	38.5	30.5
6VR09	1.1	1.5		9	67	65.5	65	63.5	61.5	59	56.5	54	51.5	48.5	46	42.5	33.5
6VR10	1.5	2		10	75	74	73.5	72	70	67.5	65	62	59	56	53.5	49	39
6VR11	1.5	2		11	82.5	81	80.5	79	76.5	73.5	71	67.5	64.5	61	58	53.5	42.5
6VR12	1.5	2		12	89.5	88	87	85.5	83	80	76.5	73	69.5	65.5	62.5	57.5	45.5
6VR13	1.5	2		13	97	95	94	92	89	86	82	78.5	74.5	70.5	67	61.5	48.5
6VR14	2.2	3		14	105.5	104.5	103.5	101.5	99	95.5	92	88	83.5	79.5	76	70	56
6VR15	2.2	3	20	15	113	111.5	110.5	108.5	105.5	102	98	93.5	89	84.5	80.5	74	59.5
6VR16	2.2	3		16	120.5	118.5	117.5	115.5	112	108	104	99	94.5	89.5	85.5	78.5	62.5
6VR17	2.2	3		17	127.5	125.5	124.5	122	118.5	114.5	109.5	105	99.5	94.5	90	83	66
6VR18	2.2	3		18	135	132.5	131.5	128.5	125	120.5	115.5	110.5	105	99.5	94.5	87	69
6VR19	2.2	3		19	142	139.5	138	135.5	131.5	126.5	121.5	115.5	110	104	99	91	72
6VR20	3	4		20	152	150	149	146.5	142.5	138	133	127	121	115	110	101.5	82
6VR21	3	4		21	159	157.5	156	153.5	149.5	144.5	139	133	127	120.5	115	106	85.5
6VR23	3	4		23	174	172	170.5	167.5	163	157.5	151.5	144.5	138	131	125	115	92.5
6VR25	3	4		25	189	188	184.5	180.5	175.5	170	164	157.5	150.5	142.5	135.5	123.5	98.5
6VR28	4	5.5		28	214	213.5	210	205.5	200.5	194.5	188	181	173.5	164.5	156.5	143	115.5
6VR30	4	5.5		30	229	228	224.5	220	214	207.5	200.5	193	184.5	175.5	167	152.5	122.5
6VR33	4	5.5		33	251.5	250.5	246.5	241	234.5	227	219.5	211	201.5	191	182	166	133.5
6VR36	5.5	7.5		36	275	274	270	264	257.5	249.5	241.5	232.5	222.5	211.5	201.5	184	148.5

6 VR - DIMENSIONS

F-VERSION

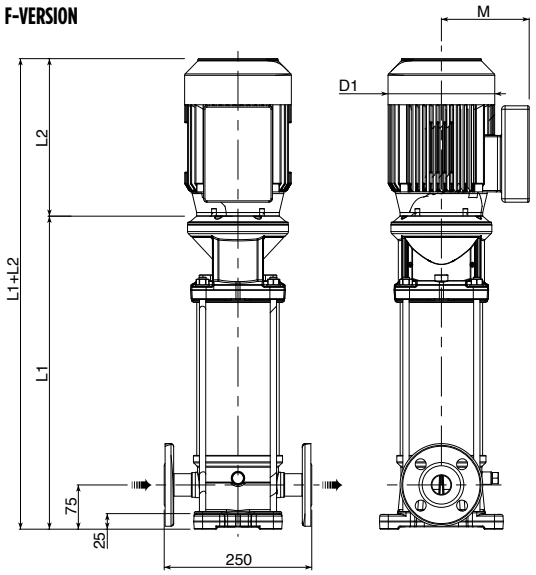

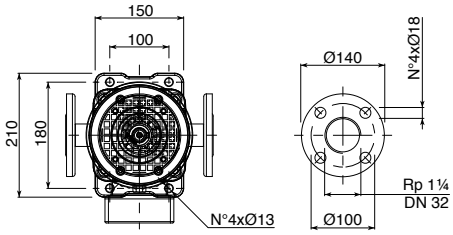

V-VERSION

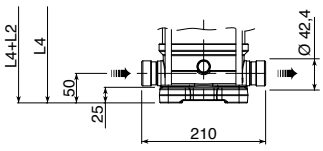

T-VERSION

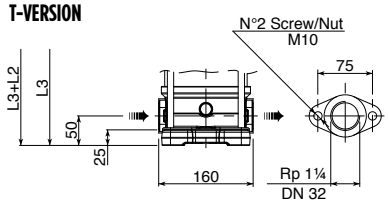

C-VERSION

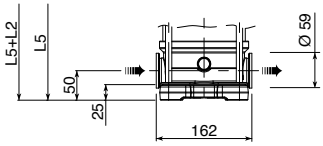

F-Version: Round flanges on body type PN25; pump is supplied without counter-flanges (optional accessories, including bolts and joints).
T-Version: Oval flanges on body type PN16; pump is supplied without threaded oval counter-flanges (optional accessories, including bolts and joints).
V-Version: Connections with rapid fittings type "Victaulic"; pump is supplied without the collars (optional accessories).
C-Version: Connections with round fittings type Clamp-FlexiClamp; pump is supplied without collars (optional accessories).

Model	Motor				Dimensions (mm)									Weight (kg)		
	Rated Power		Size	MTG	L1	L2		L1+L2	M		D1		D2	PE	Motor	PMA
	kW	HP			F	1-PH	3-PH		1-PH	3-PH	1-PH	3-PH				
6VR02	0.37	0.5	71	B14	319.5	215	215	534.5	129	112	142	142	170	15	5.8	20.8
6VR03	0.37	0.5	71		345.5	215	215	560.5	129	112	142	142	170	15.5	5.8	21.3
6VR04	0.55	0.75	71		371.5	215	215	586.5	129	112	142	142	170	16	6.2	22.2
6VR05	0.75	1	80		397.5	232	232	629.5	150	129	160	160	170	16.5	9.5	26
6VR06	0.75	1	80		423.5	232	232	655.5	150	129	160	160	170	17.5	9.5	27
6VR07	1.1	1.5	80		449.5	232	232	681.5	150	129	160	160	170	18	11.1	29.1
6VR08	1.1	1.5	80		475.5	232	232	707.5	150	129	160	160	170	18.5	11.1	29.6
6VR09	1.1	1.5	80		501.5	232	232	733.5	150	129	160	160	170	19	11.1	30.1
6VR10	1.5	2	90		537.5	267	267	804.5	160	138	180	180	170	20	14	34
6VR11	1.5	2	90		563.5	267	267	830.5	160	138	180	180	170	20.5	14	34.5
6VR12	1.5	2	90		589.5	267	267	856.5	160	138	180	180	170	21	14	35
6VR13	1.5	2	90		615.5	267	267	882.5	160	138	180	180	170	21.5	14	35.5
6VR14	2.2	3	90		641.5	267	267	908.5	160	138	180	180	170	22	16	38
6VR15	2.2	3	90		667.5	267	267	934.5	160	138	180	180	170	22.5	16	38.5
6VR16	2.2	3	90		693.5	267	267	960.5	160	138	180	180	170	23	16	39
6VR17	2.2	3	90		719.5	267	267	986.5	160	138	180	180	170	23.5	16	39.5
6VR18	2.2	3	90		745.5	267	267	1012.5	160	138	180	180	170	24	16	40
6VR19	2.2	3	90		771.5	267	267	1038.5	160	138	180	180	170	24.5	16	40.5
6VR20	3	4	100		807.5	-	290	1097.5	-	138	-	180	170	25.5	18	43.5
6VR21	3	4	100		833.5	-	290	1123.5	-	138	-	180	170	26	18	44
6VR23	3	4	100		885.5	-	290	1175.5	-	138	-	180	170	27	18	45
6VR25	3	4	100		937.5	-	290	1227.5	-	138	-	180	170	28.5	18	46.5
6VR28	4	5.5	112		1015.5	-	306	1321.5	-	145	-	196	170	30	26.5	56.5
6VR30	4	5.5	112		1067.5	-	306	1373.5	-	145	-	196	170	31	26.5	57.5
6VR33	4	5.5	112		1145.5	-	306	1451.5	-	145	-	196	170	32.5	26.5	59
6VR36	5.5	7.5	132		-	-	328	-	-	160	-	225	300	53.5	33.6	87.1

6 VR - PERFORMANCE CURVE

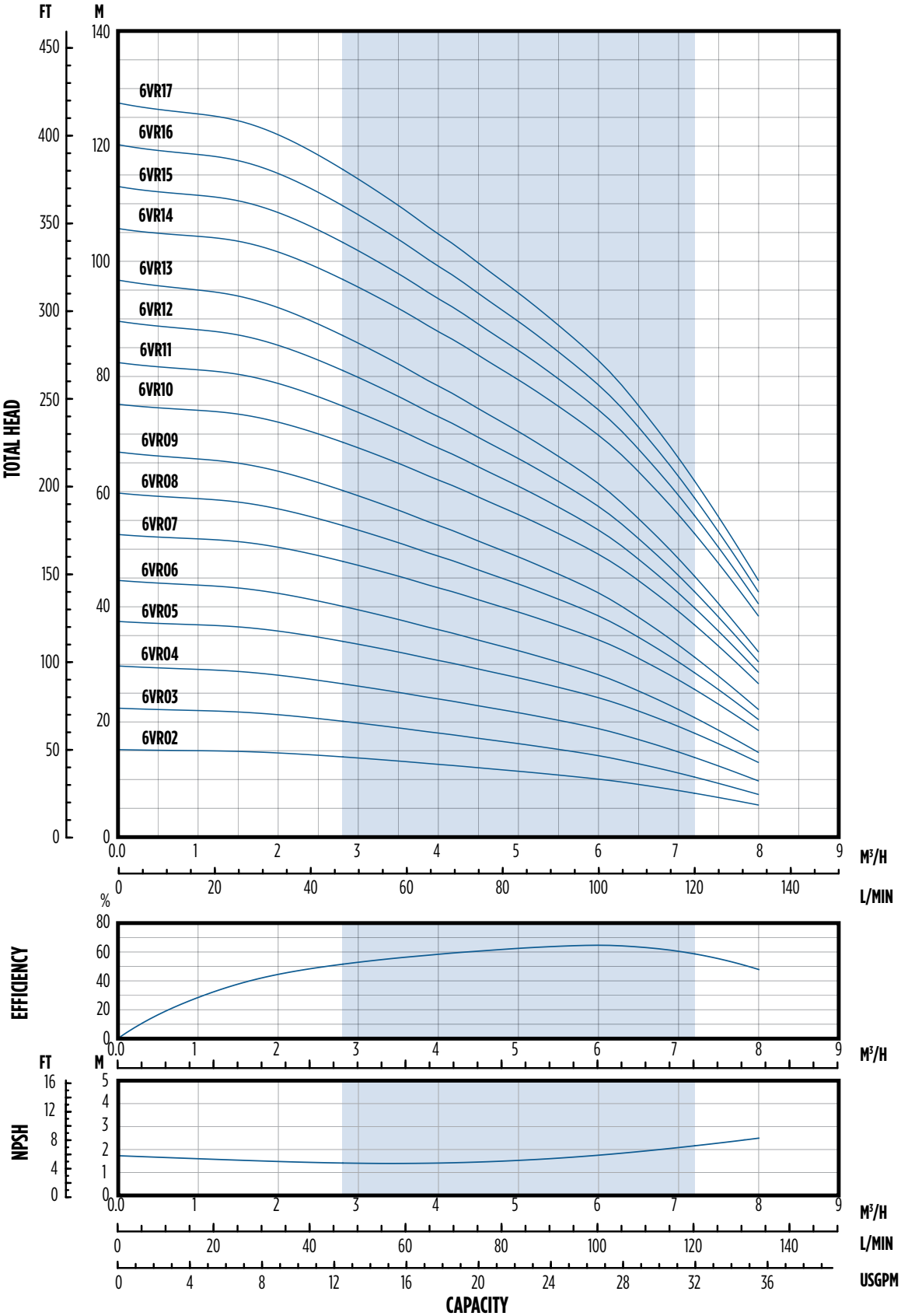

NOTE: Specifications subject to change without prior notice. Hydraulic characteristics are according to ISO standard 9906, Annex A.

Franklin Electric

6 VR - PERFORMANCE CURVE

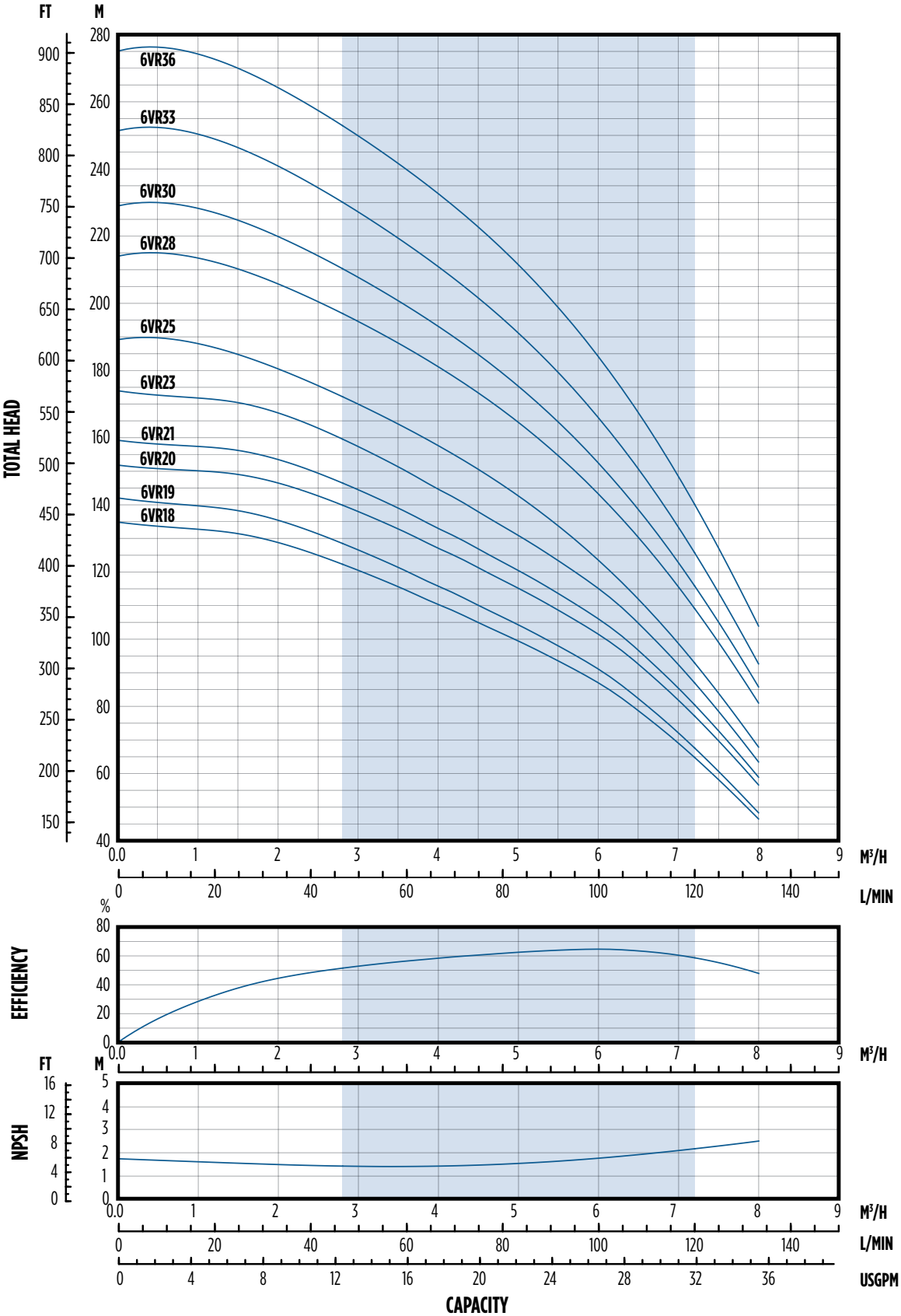

NOTE: Specifications subject to change without prior notice. Hydraulic characteristics are according to ISO standard 9906, Annex A.

6 VR - POWER CURVE

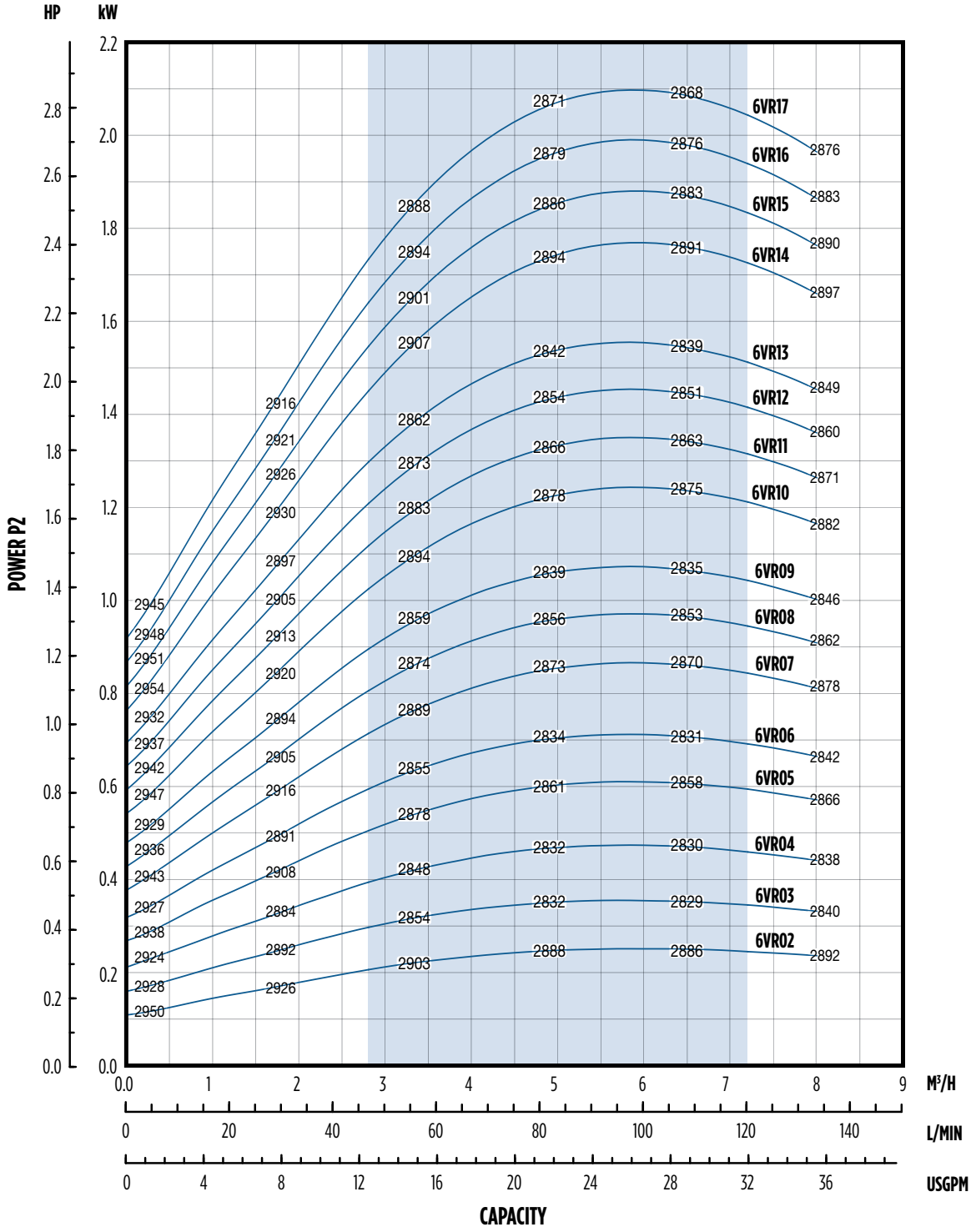

NOTE: Specifications subject to change without prior notice.

Franklin Electric

6 VR - POWER CURVE

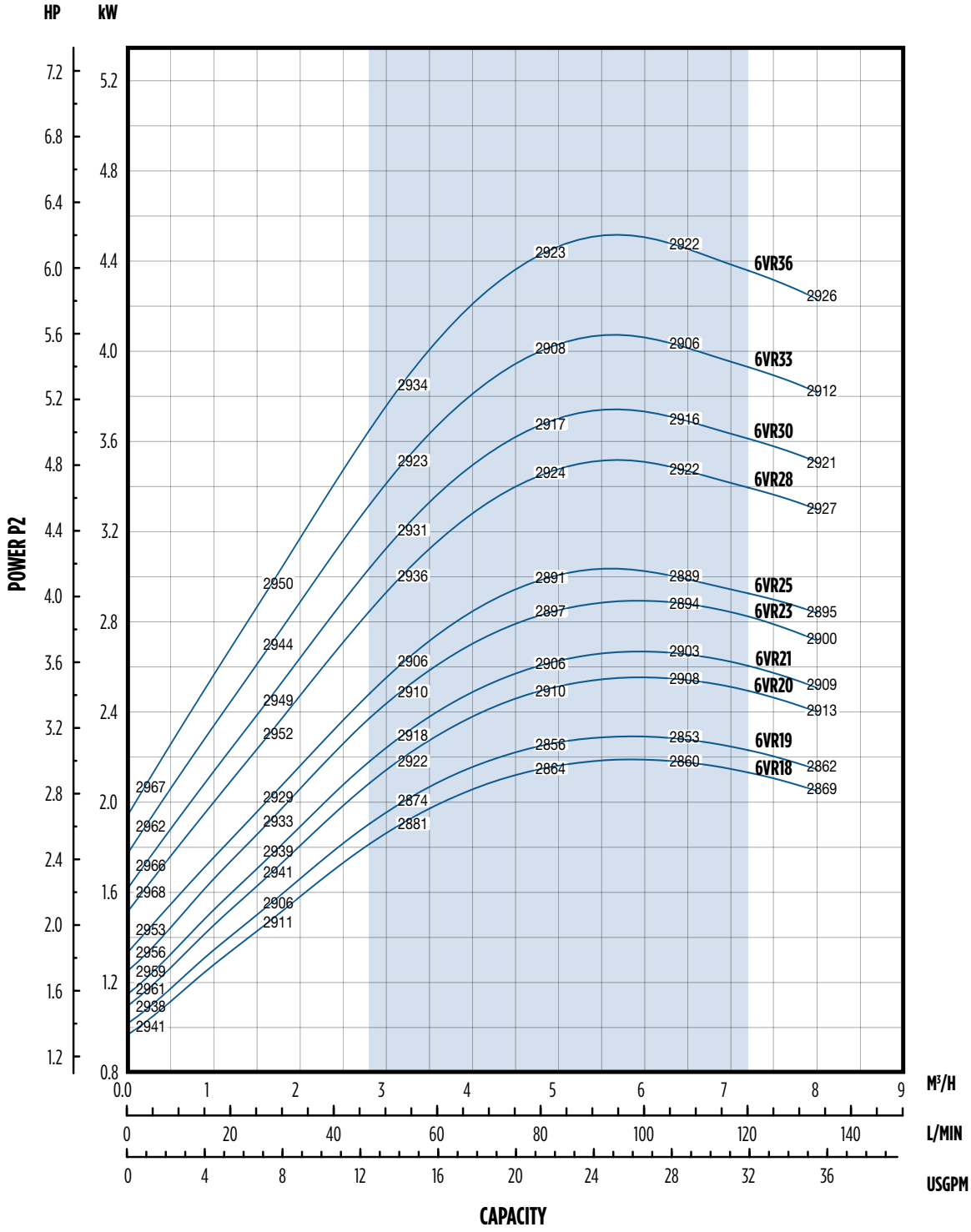

NOTE: Specifications subject to change without prior notice.

10 VR - HYDRAULIC PERFORMANCE

Model	Rated Power		H1	Stages	Delivery													
					l/min - 0	50.0	58.3	67	75.0	83.3	90	100.0	116.7	133	150.0	166.7	183	233.3
	kW	HP	Bar		m3/h - 0	3	3.5	4	4.5	5	5.4	6	7	8	9	10	11	14
					H = Total Head Column of Water (Meters)													
10VR02	0.75	1	20	2	20	20	19.5	19.5	19	19	18.5	18.5	17.5	17	16	15	13.5	9
10VR03	1.1	1.5		3	30	30	29.5	29.5	29	28.5	28	27.5	26.5	25.5	24	22.5	20.5	13.5
10VR04	1.5	2		4	40.5	40	39.5	39.5	39	38.5	38	37	35.5	34	32.5	30.5	28	18
10VR05	1.5	2		5	50.5	49.5	49	48.5	48	47	46.5	45.5	43.5	41.5	39.5	37	33.5	21.5
10VR06	2.2	3		6	61	60.5	60	59	58.5	57.5	57	56	54	51.5	49	46	42	27.5
10VR07	2.2	3		7	70.5	70	69	68.5	67.5	66.5	66	64.5	62	59.5	56	52.5	48	31
10VR08	3	4		8	81.5	81	80.5	80	79	78	77	75.5	73	70	66.5	62.5	57.5	38
10VR09	3	4		9	91.5	91	90.5	89.5	88.5	87.5	86	84.5	81.5	78	74	69.5	64	42
10VR10	4	5.5		10	102.5	102.5	102	101	100	99	97.5	96	93	89	84.5	79.5	73.5	49
10VR11	4	5.5		11	113	112.5	111.5	111	109.5	108	107	105	101.5	97.5	92.5	87	80.5	53.5
10VR12	4	5.5		12	123	122.5	121.5	120.5	119	117.5	116.5	114	110	105.5	100.5	94	87	57.5
10VR13	4	5.5		13	133	132	131	130	128.5	127	125.5	123	118.5	113.5	108	101	93.5	61.5
10VR15	5.5	7.5		15	153.5	153	152	150.5	149	147	145.5	142.5	138	132	125.5	118	109	72
10VR17	5.5	7.5		17	173.5	172.5	171.5	169.5	168	165.5	163.5	160.5	155	148.5	141	132.5	122	80.5
10VR19	7.5	10		19	195	194.5	193.5	191.5	189.5	187.5	185.5	182	176	169	160.5	151	139.5	93
10VR21	7.5	10		21	215.5	214.5	213	211	209	206	204	200	193.5	185.5	176.5	166	153	101.5
10VR23	7.5	10		23	235.5	234	232.5	230.5	228	225	222.5	218.5	211	202	192	180.5	166.5	110
10VR24	11	15		24	248	248.5	247	245.5	243	240.5	238	234	227	218	208	196	182	122.5

Franklin Electric

10 VR - DIMENSIONS

F-VERSION

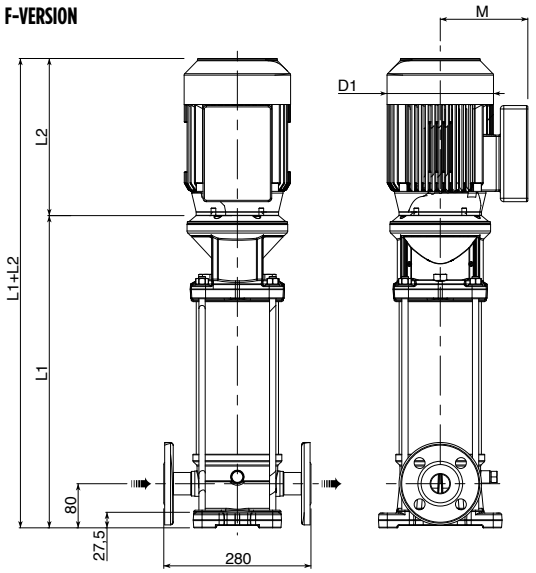

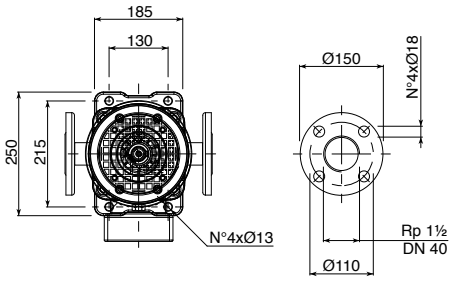

V-VERSION

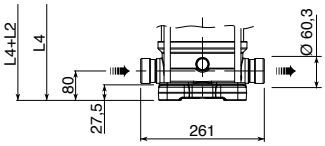

T-VERSION

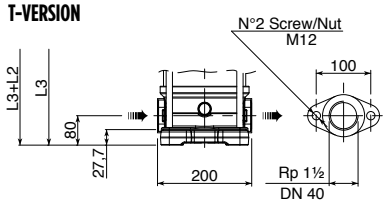

C-VERSION

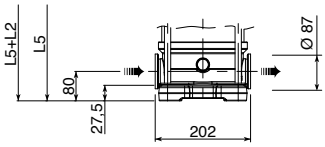

F-Version: Round flanges on body type PN25; pump is supplied without counter-flanges (optional accessories, including bolts and joints).
T-Version: Oval flanges on body type PN16; pump is supplied without threaded oval counter-flanges (optional accessories, including bolts and joints).
V-Version: Connections with rapid fittings type "Victaulic"; pump is supplied without the collars (optional accessories).
C-Version: Connections with round fittings type Clamp-FlexiClamp; pump is supplied without collars (optional accessories).

Model	Motor				Dimensions (mm)									Weight (kg)		
	Rated Power		Size	MTG	L1	L2		L1+L2	M		D1		D2	PE	Motor	PMA
	kW	HP				1-PH	3-PH		1-PH	3-PH	1-PH	3-PH				
10VR02	0.75	1	80	B14	347.5	232	232	579.5	150	129	160	160	170	17.5	9.5	27
10VR03	1.1	1.5	80	B14	377.5	232	232	609.5	150	129	160	160	170	18	11.1	29.1
10VR04	1.5	2	90	B14	417.5	267	267	684.5	160	138	180	180	170	19.5	14	33.5
10VR05	1.5	2	90	B14	447.5	267	267	714.5	160	138	180	180	170	20	14	34
10VR06	2.2	3	90	B14	477.5	267	267	744.5	160	138	180	180	170	20.5	16	36.5
10VR07	2.2	3	90	B14	507.5	267	267	774.5	160	138	180	180	170	21	16	37
10VR08	3	4	100	B14	547.5	-	290	837.5	-	138	-	180	170	22.5	18	40.5
10VR09	3	4	100	B14	577.5	-	290	867.5	-	138	-	180	170	23	18	41
10VR10	4	5.5	112	B14	607.5	-	306	913.5	-	145	-	196	170	24	26.5	50.5
10VR11	4	5.5	112	B14	637.5	-	306	943.5	-	145	-	196	170	24.5	26.5	51
10VR12	4	5.5	112	B14	667.5	-	306	973.5	-	145	-	196	170	25	26.5	51.5
10VR13	4	5.5	112	B14	697.5	-	306	1003.5	-	145	-	196	170	26	26.5	52.5
10VR15	5.5	7.5	132	B5	933	-	328	1261	-	161	-	225	300	46.5	33.6	80.1
10VR17	5.5	7.5	132	B5	993	-	328	1321	-	161	-	225	300	48	33.6	81.6
10VR19	7.5	10	132	B5	1053	-	350	1403	-	161	-	225	300	49	36	85
10VR21	7.5	10	132	B5	1113	-	350	1463	-	161	-	225	300	50.5	36	86.5
10VR23	7.5	10	132	-	1173	-	350	1523	-	161	-	225	300	52	36	88
10VR24	11	15	160	-	1223	-	425	1648	-	198	-	248	350	55	59	114

10 VR - PERFORMANCE CURVE

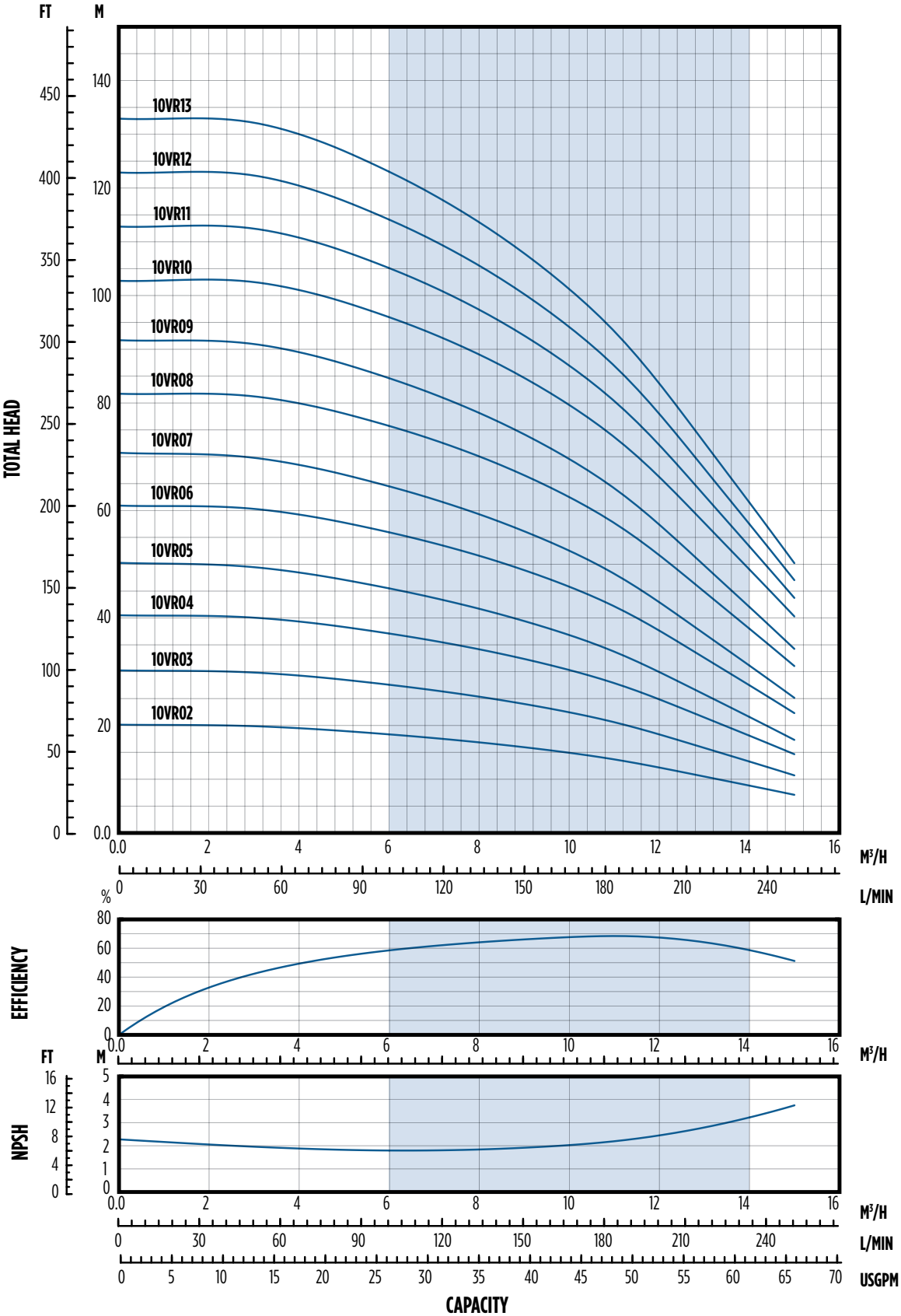

NOTE: Specifications subject to change without prior notice. Hydraulic characteristics are according to ISO standard 9906, Annex A.

Franklin Electric

10 VR - PERFORMANCE CURVE

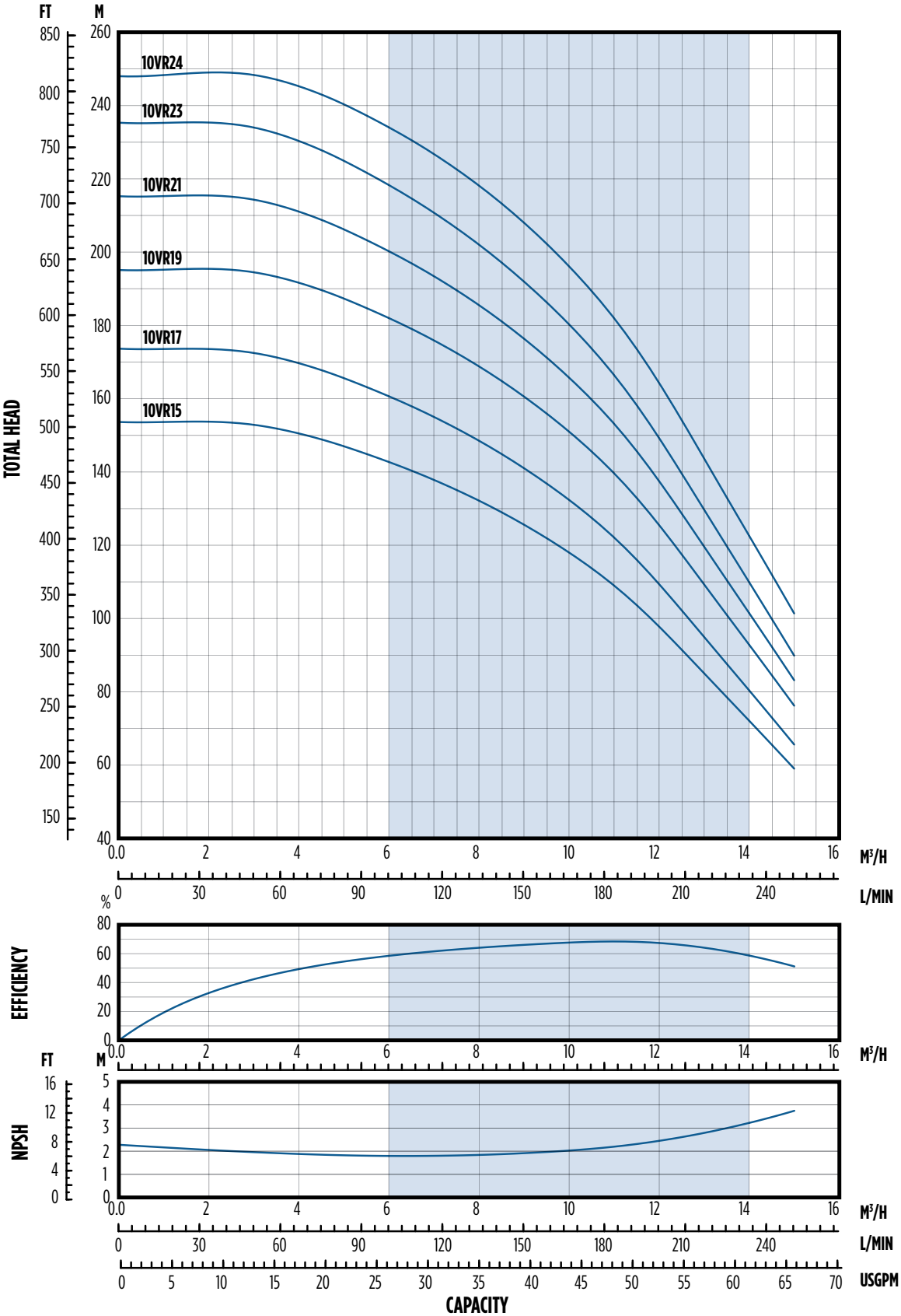

NOTE: Specifications subject to change without prior notice. Hydraulic characteristics are according to ISO standard 9906, Annex A.

10 VR - POWER CURVE

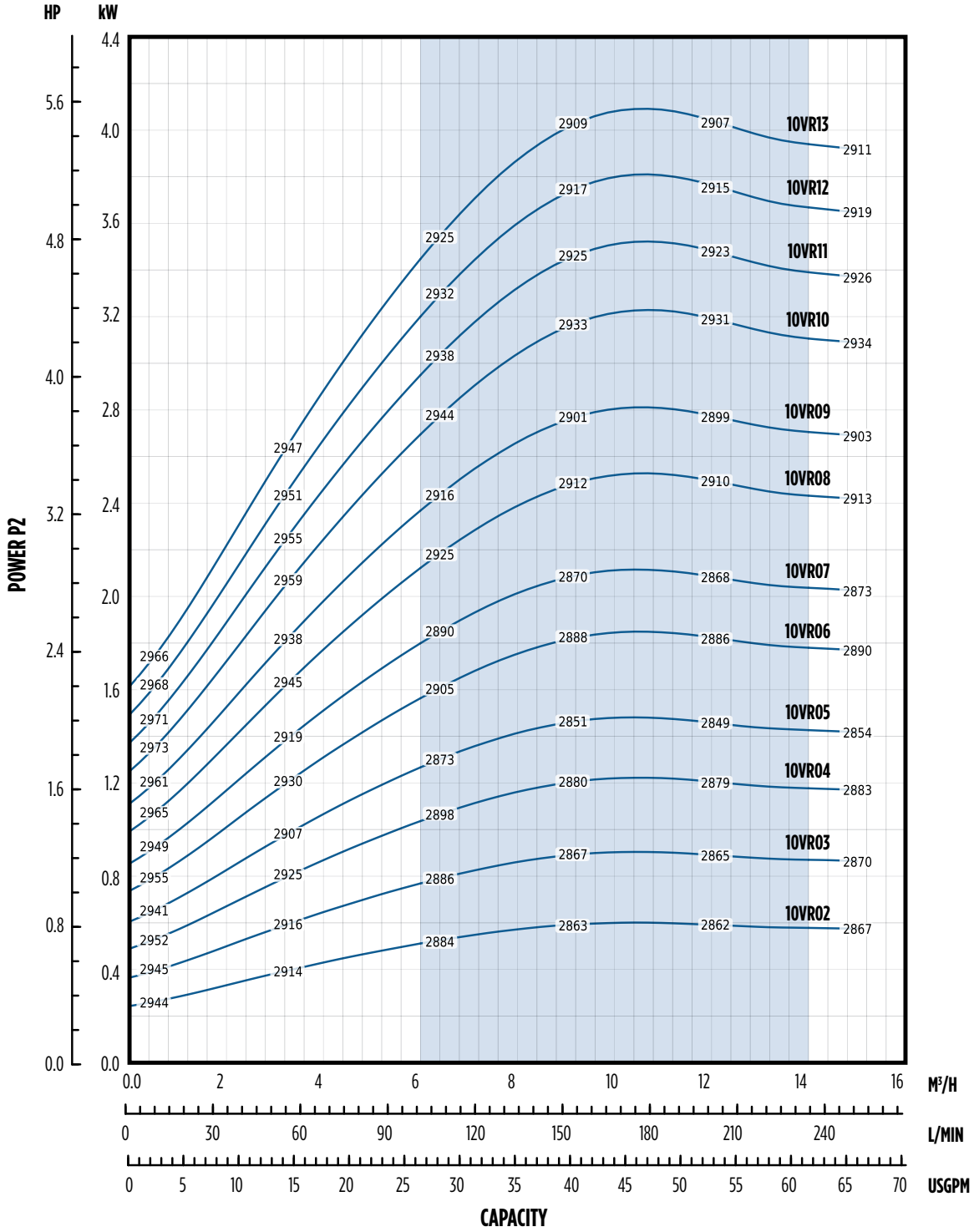

NOTE: Specifications subject to change without prior notice.

Franklin Electric

10 VR - POWER CURVE

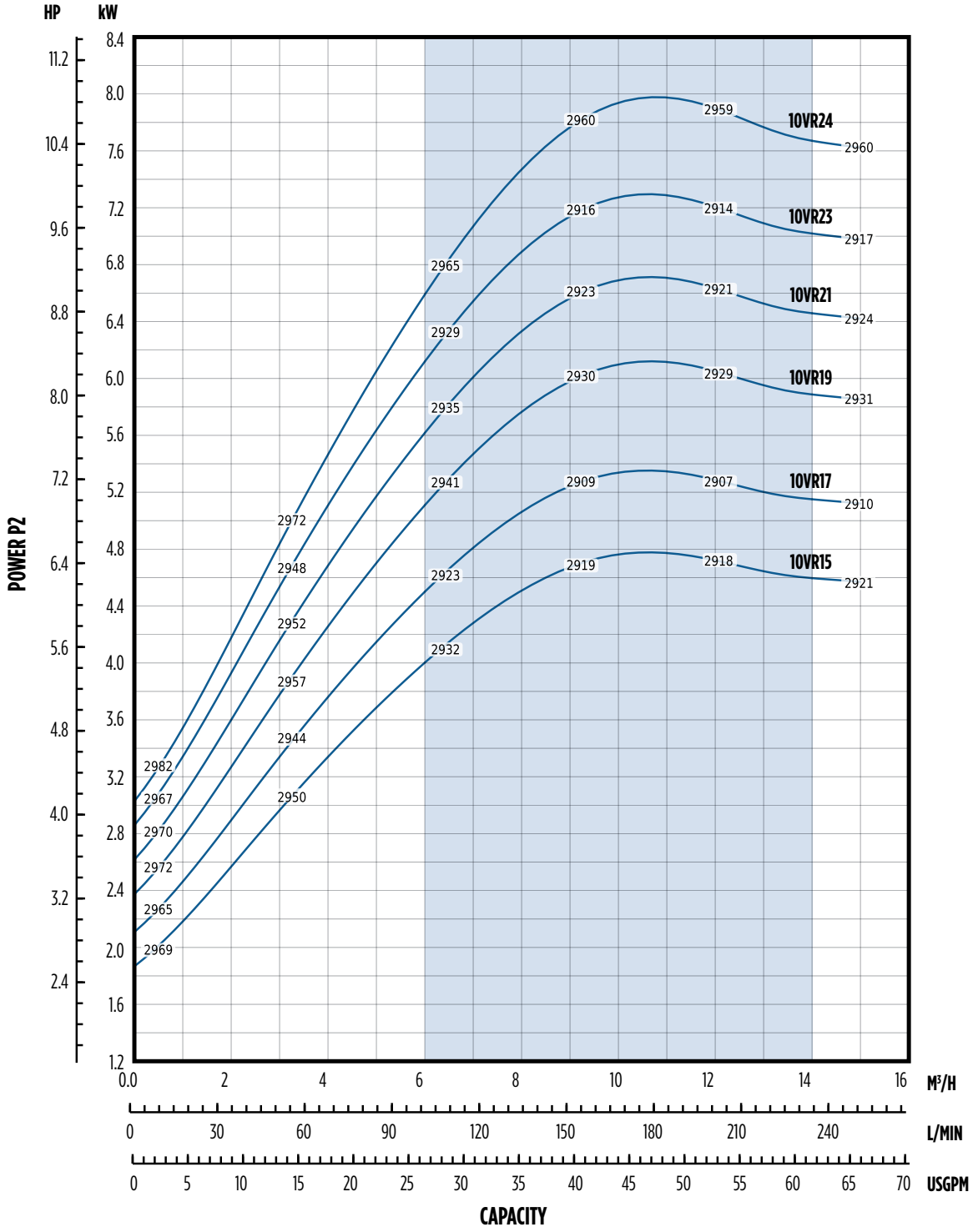

NOTE: Specifications subject to change without prior notice.

15 VR - HYDRAULIC PERFORMANCE

Model	Rated Power		H1	Stages	Delivery									
					l/min - 0	133	167	200	233	266	300	333	367	400
	kW	HP	Bar		m^3/h - 0	8	10	12	14	16	18	20	22	24
					H = Total Head Column of Water (Meters)									
15VR01	1.1	1.5	20	1	14.5	13	12.5	12	11.5	10.5	9.5	8.5	7	5.5
15VR02	2.2	3		2	29	26	25	24	23	21.5	19.5	17	14	11
15VR03	3	4		3	43.5	39	38	36.5	34.5	32.5	29.5	26	21.5	17
15VR04	4	5.5		4	58	52.5	51	49	46.5	44	40.5	35.5	29.5	23.5
15VR05	4	5.5		5	72.5	65.5	63.5	60.5	57.5	54.5	49.5	43	36	28.5
15VR06	5.5	7.5		6	87.5	79.5	77	74	71	67	61.5	54	46	36.5
15VR07	5.5	7.5		7	102	92	89	86	82	77.5	70.5	62	52.5	41.5
15VR08	7.5	10		8	117	106.5	103	99.5	95	90	82.5	72.5	62	49
15VR09	7.5	10		9	131.5	119	115.5	111	106	100.5	92	81	69	54.5
15VR10	11	15		10	147.5	134.5	131	126.5	121	115	106	94	80.5	65
15VR11	11	15		11	162	148	143.5	139	133	126.5	116.5	103	88.5	71
15VR12	11	15		12	176.5	161	156.5	151	144.5	137.5	126.5	112	96	77
15VR13	11	15		13	191	174.5	169	163.5	156.5	148.5	136.5	120.5	103	82.5
15VR14	11	15		14	205.5	187.5	182	175.5	168	159	146	129	110.5	88
15VR15	15	20		15	221	201	195.5	188.5	180.5	171.5	157.5	139.5	119.5	95.5
15VR16	15	20		16	235.5	214	208	200.5	192	182.5	167.5	148	126.5	101.5
15VR17	15	20		17	249.5	227.5	220.5	213	203.5	193	177.5	156.5	134	107

Franklin Electric

15 VR - DIMENSIONS

F-VERSION

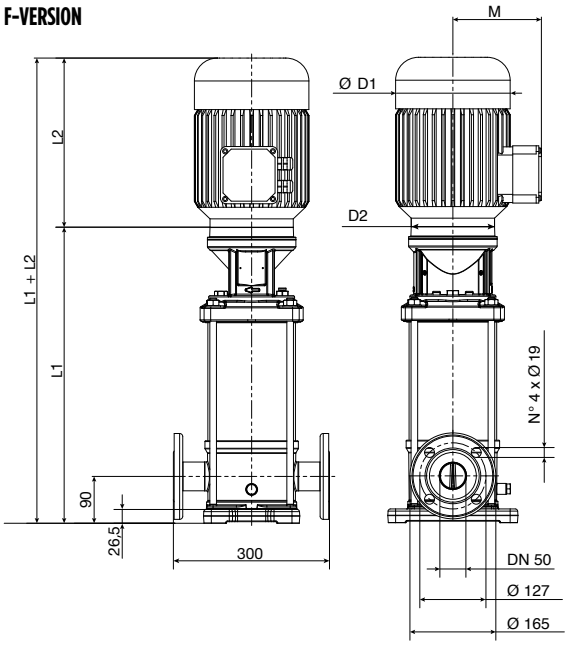

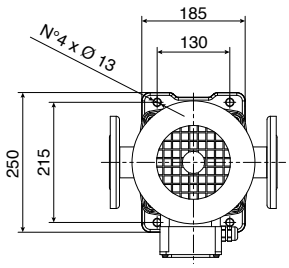

V-VERSION

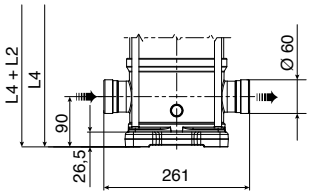

T-VERSION

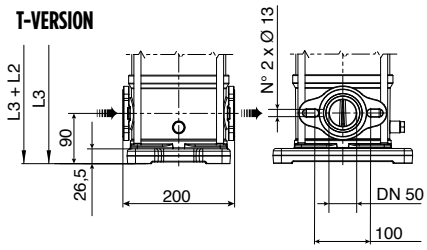

C-VERSION

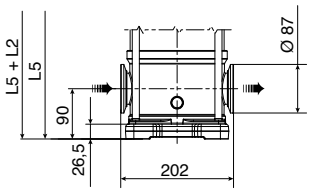

F-Version: Round flanges on body type PN25; pump is supplied without counter-flanges (optional accessories, including bolts and joints).
T-Version: Oval flanges on body type PN16; pump is supplied without threaded oval counter-flanges (optional accessories, including bolts and joints).
V-Version: Connections with rapid fittings type "Victaulic"; pump is supplied without the collars (optional accessories).
C-Version: Connections with round fittings type Clamp-FlexiClamp; pump is supplied without collars (optional accessories).

Model	Motor				Dimensions (mm)									Weight (kg)		
	Rated Power		Size	MTG	L1	L2		L1+L2	M		D1		D2	PE	Motor	PMA
	kW	HP				1-PH	3-PH		1-PH	3-PH	1-PH	3-PH				
15VR01	1.1	1.5	80	B14	405	232	232	637	150	129	160	160	170	23.5	12	35.5
15VR02	2.2	3	90	B14	415	267	267	682	160	138	180	180	170	25	16	41
15VR03	3	4	100	B14	473	-	267	740	-	138	-	180	170	27	18.7	45.7
15VR04	4	5.5	112	B14	521	-	306	827	-	145	-	196	170	28.5	22.8	51.3
15VR05	4	5.5	112	B14	569	-	306	875	-	145	-	196	170	30	22.8	52.8
15VR06	5.5	7.5	132	B5	804	-	328	1132	-	161	-	225	300	52	34	86
15VR07	5.5	7.5	132	B5	852	-	328	1180	-	161	-	225	300	53	34	87
15VR08	7.5	10	132	B5	900	-	350	1250	-	161	-	225	300	54.5	36	90.5
15VR09	7.5	10	132	B5	948	-	350	1298	-	161	-	225	300	56	36	92
15VR10	11	15	160	B5	1016	-	425	1441	-	198	-	248	350	60	58	118
15VR11	11	15	160	B5	1064	-	425	1489	-	198	-	248	350	61.5	58	119.5
15VR12	11	15	160	B5	1112	-	425	1537	-	198	-	248	350	63	58	121
15VR13	11	15	160	B5	1160	-	425	1585	-	198	-	248	350	64.5	58	122.5
15VR14	11	15	160	B5	1208	-	425	1633	-	198	-	248	350	66	58	124
15VR15	15	20	160	B5	1256	-	476	1732	-	198	-	248	350	67	64	131
15VR16	15	20	160	B5	1304	-	476	1780	-	198	-	248	350	68.5	64	132.5
15VR17	15	20	160	B5	1352	-	476	1828	-	198	-	248	350	70	64	134

15 VR - PERFORMANCE CURVE

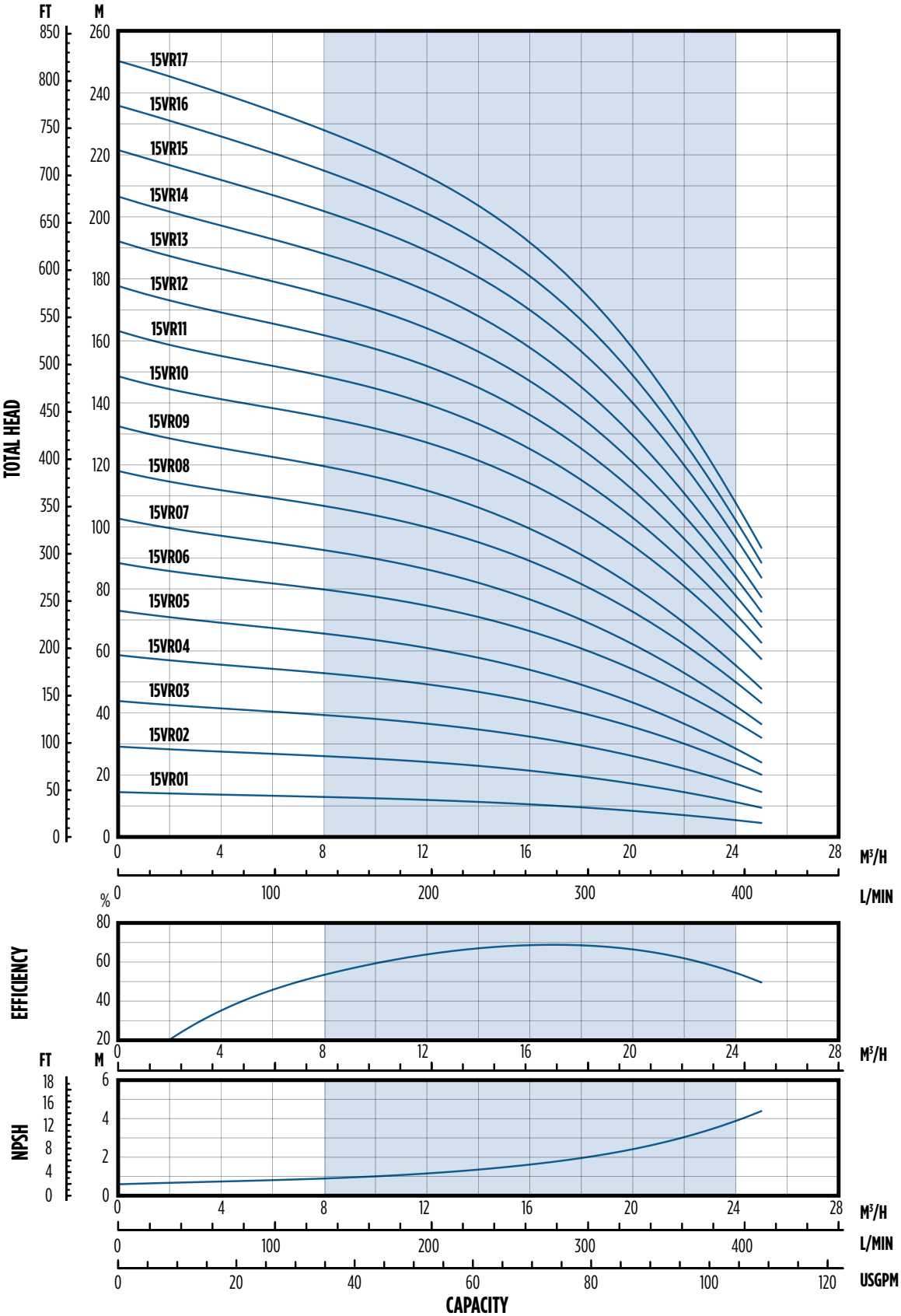

NOTE: Specifications subject to change without prior notice. Hydraulic characteristics are according to ISO standard 9906, Annex A.

Franklin Electric

15 VR - POWER CURVE

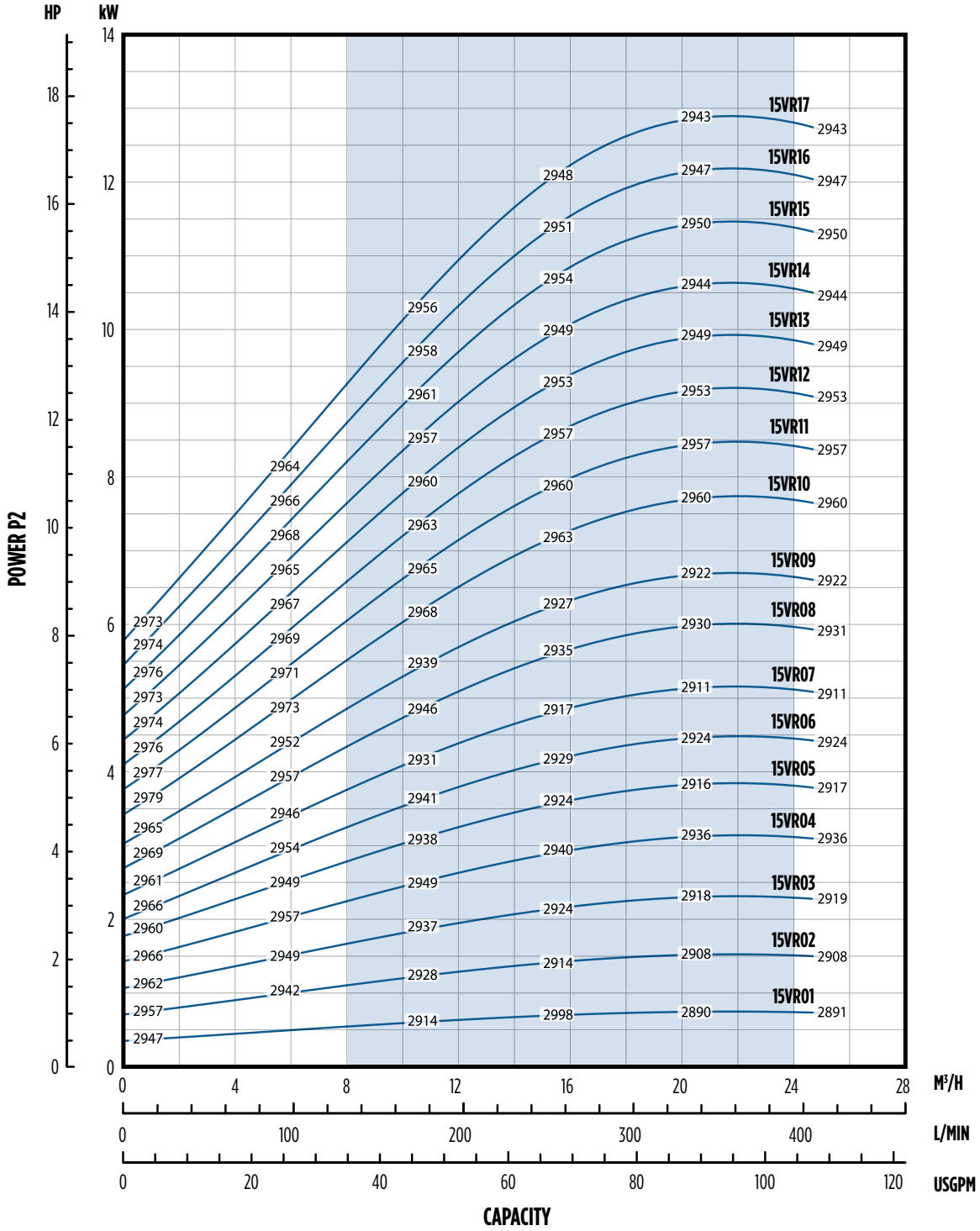

NOTE: Specifications subject to change without prior notice.

20 VR - HYDRAULIC PERFORMANCE

Model	Rated Power		H1	Stages	Delivery										
					l/min - 0	167	200	233	266	300	333	367	400	433.5	466.5
	kW	HP	Bar		m^3/h - 0	10	12	14	16	18	20	22	24	26	28
					H = Total Head Column of Water (Meters)										
20VR01	1.1	1.5	20	1	15.5	13.5	13	13	12.5	12	11	10	8.5	7.5	6
20VR02	2.2	3		2	31	27.5	27	26	25	24	22.5	20.5	18	15	12
20VR03	4	5.5		3	46.5	41.5	40.5	39.5	38	36.5	34.5	31	27.5	23	18.5
20VR04	5.5	7.5		4	62.5	56	55	53.5	51.5	49.5	46.5	42.5	37	31.5	25.5
20VR05	5.5	7.5		5	78	70	68.5	66.5	64.5	62	58	53	47	40	32.5
20VR06	7.5	10		6	94.5	86.5	84.5	82.5	80	77.5	73.5	67.5	60	52	42.5
20VR07	7.5	10		7	110	100.5	98	95.5	93	90	85	77.5	69	59.5	48.5
20VR08	11	15		8	126.5	117	114	112	109	106	100.5	92.5	82.5	72	59.5
20VR09	11	15		9	142.5	131	128	125.5	122	118.5	112.5	103.5	92.5	80.5	66.5
20VR10	11	15		10	158	145.5	142	139	135	131.5	124.5	114	102	88.5	73
20VR11	15	20		11	174	160	156.5	153	149	144.5	137	126	113	98	81
20VR12	15	20		12	189.5	174.5	170.5	167	162	157.5	149	137	122.5	106.5	87.5
20VR13	15	20		13	205	188.5	184	180	175	170	161	147.5	132	114.5	94
20VR14	15	20		14	220.5	202.5	198	193.5	188	182.5	172.5	158	141	122	100.5
20VR15	18.5	25		15	237	217.5	212.5	208	202	196	185.5	170.5	152	132	108.5
20VR16	18.5	25		16	252.5	231.5	226	221	215	208.5	197	181	161.5	140	115
20VR17	18.5	25		17	268	245.5	240	234.5	227.5	221	209	191.5	171	148	121.5

Franklin Electric

20 VR - DIMENSIONS

F-VERSION

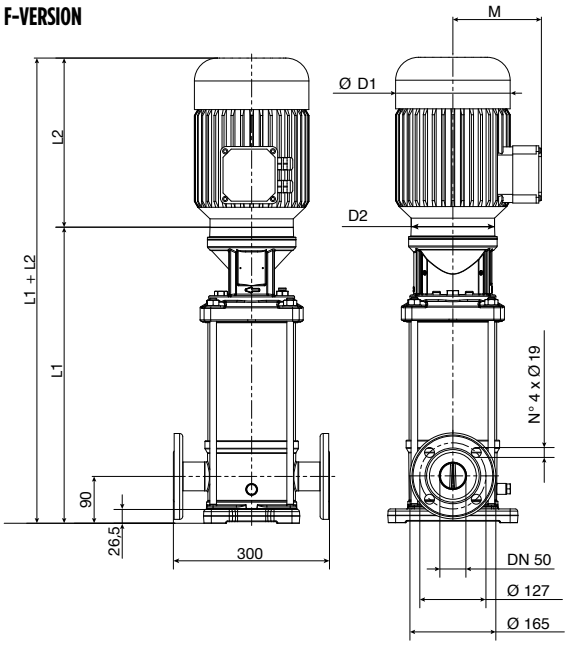

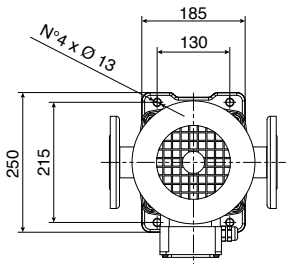

V-VERSION

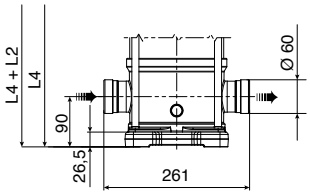

T-VERSION

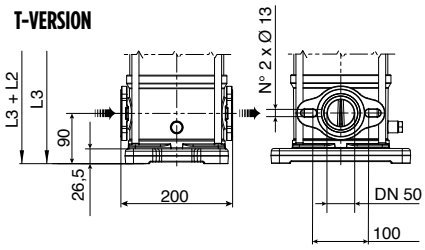

C-VERSION

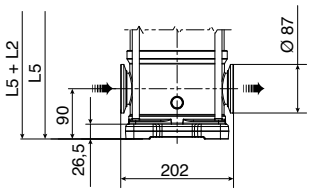

F-Version: Round flanges on body type PN25; pump is supplied without counter-flanges (optional accessories, including bolts and joints).
T-Version: Oval flanges on body type PN16; pump is supplied without threaded oval counter-flanges (optional accessories, including bolts and joints).
V-Version: Connections with rapid fittings type "Victaulic"; pump is supplied without the collars (optional accessories).
C-Version: Connections with round fittings type Clamp-FlexiClamp; pump is supplied without collars (optional accessories).

Model	Motor				Dimensions (mm)									Weight (kg)		
	Rated Power		Size	MTG	L1	L2		L1+L2	M		D1		D2	PE	Motor	PMA
	kW	HP				1-PH	3-PH		1-PH	3-PH	1-PH	3-PH				
20VR01	1.1	1.5	80	B14	405	232	232	637	150	129	160	160	170	23.5	12	35.5
20VR02	2.2	3	90	B14	415	267	267	682	160	138	180	180	170	25.5	16	41.5
20VR03	4	5.5	100	B14	473	-	306	740	-	145	-	196	170	27	22.8	49.8
20VR04	5.5	7.5	112	B14	708	-	328	827	-	161	-	225	300	49	34	83
20VR05	5.5	7.5	112	B14	756	-	328	875	-	161	-	225	300	50.5	34	84.5
20VR06	7.5	10	132	B5	804	-	350	1132	-	161	-	225	300	52	36	88
20VR07	7.5	10	132	B5	852	-	350	1180	-	161	-	225	300	53	36	89
20VR08	11	15	132	B5	920	-	425	1250	-	198	-	248	350	57.5	58	115.5
20VR09	11	15	132	B5	968	-	425	1298	-	198	-	248	350	59	58	117
20VR10	11	15	160	B5	1016	-	425	1441	-	198	-	248	350	60.5	58	118.5
20VR11	15	20	160	B5	1064	-	476	1489	-	198	-	248	350	61.5	64	125.5
20VR12	15	20	160	B5	1112	-	476	1537	-	198	-	248	350	63	64	127
20VR13	15	20	160	B5	1160	-	476	1585	-	198	-	248	350	64.5	64	128.5
20VR14	15	20	160	B5	1208	-	476	1633	-	198	-	248	350	66	64	130
20VR15	18.5	25	160	B5	1256	-	542	1732	-	235	-	317	350	67.5	88.9	156.4
20VR16	18.5	25	160	B5	1304	-	542	1780	-	235	-	317	350	68.5	88.9	157.4
20VR17	18.5	25	160	B5	1352	-	542	1828	-	235	-	317	350	70	88.9	158.9

20 VR - PERFORMANCE CURVE

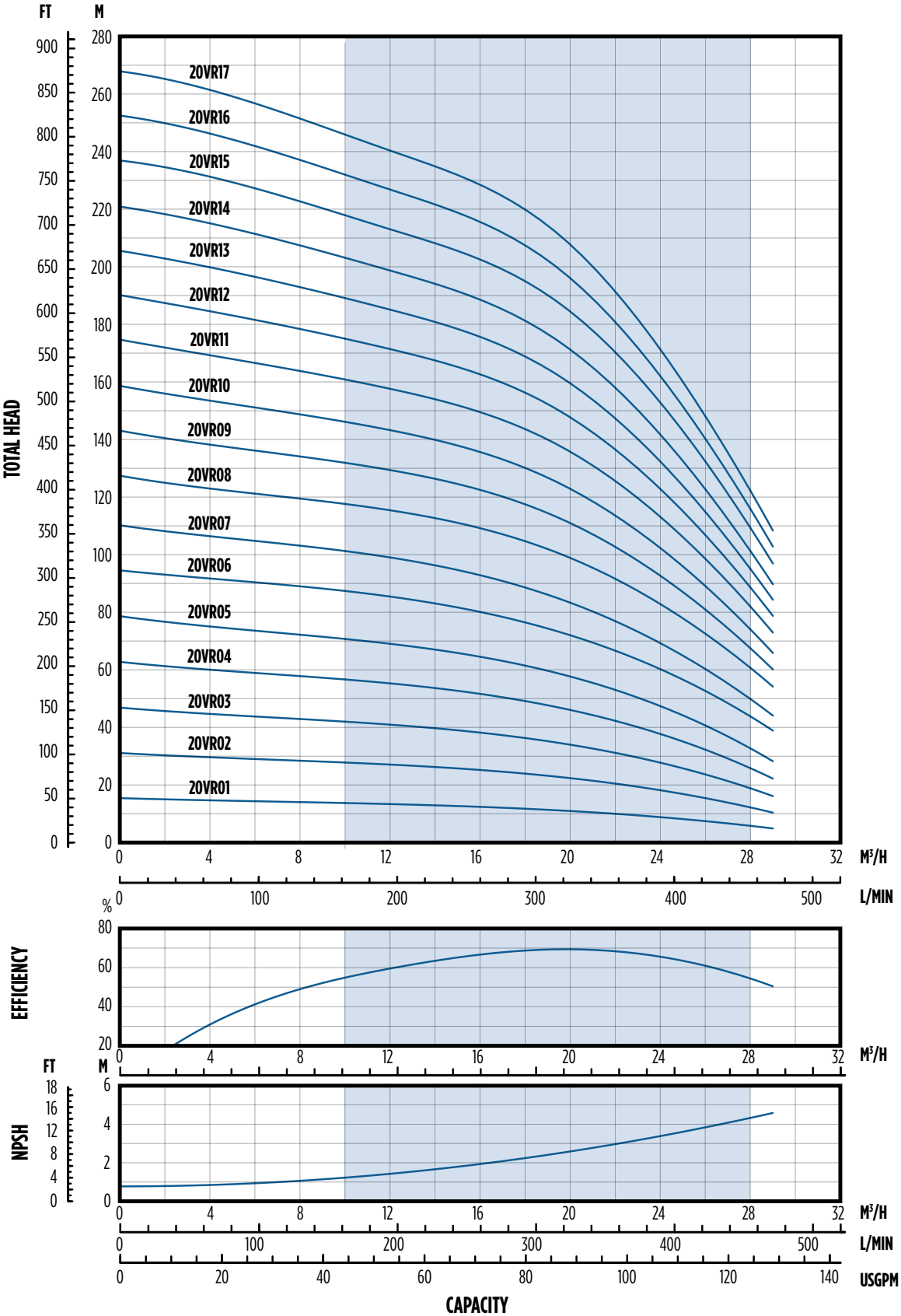

NOTE: Specifications subject to change without prior notice. Hydraulic characteristics are according to ISO standard 9906, Annex A.

Franklin Electric

20 VR - POWER CURVE

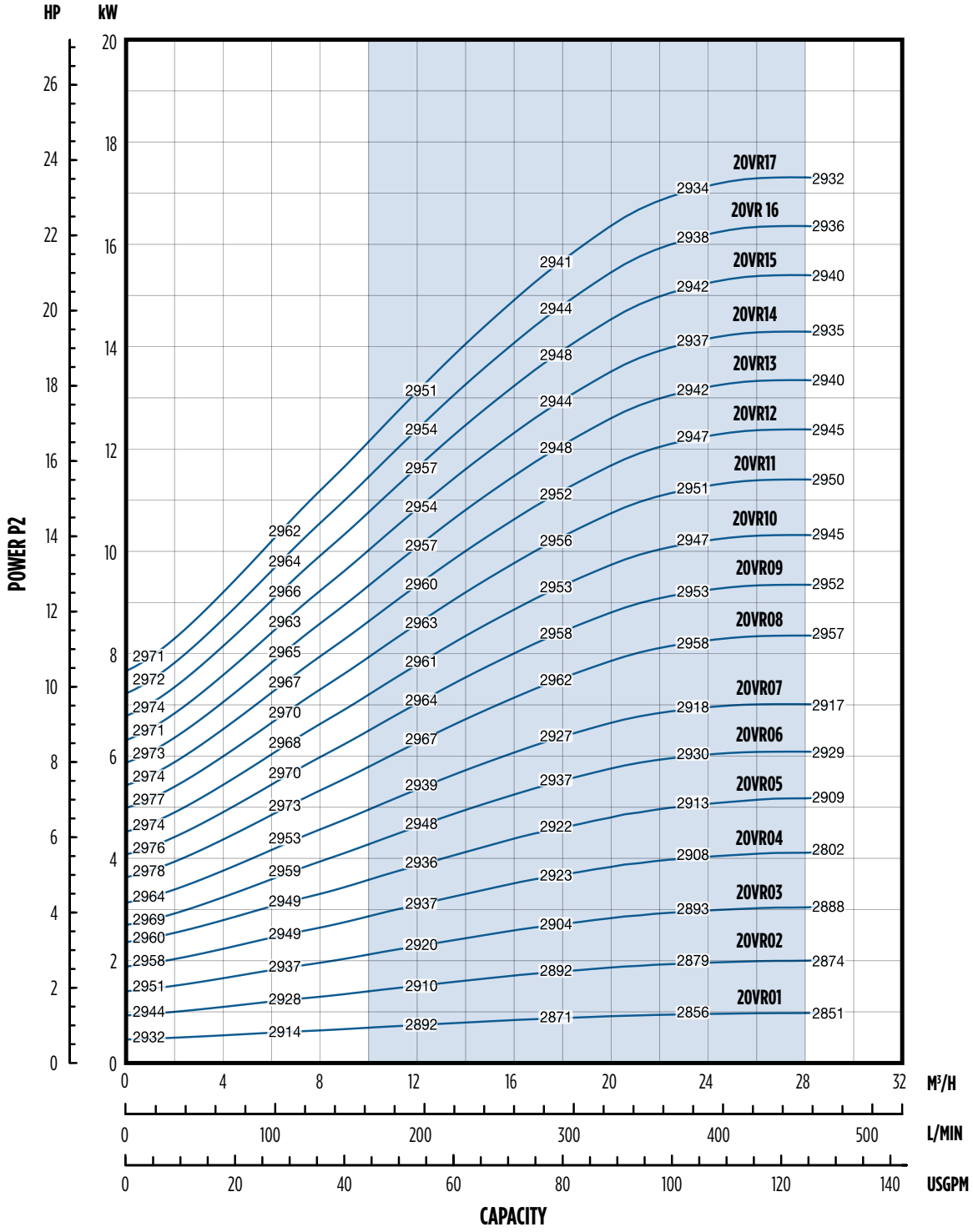

NOTE: Specifications subject to change without prior notice.

30 VR - HYDRAULIC PERFORMANCE

Model	Rated Power		H1	Stages	Delivery								
					l/min - 0	250	300	367	417	500	583	667	750
	kW	HP	Bar		m^3/h - 0	15	18	22	25	30	35	40	45
					H = Total Head Column of Water (Meters)								
30VR01-00	2.2	3	20	1	24	21	20.5	19.5	19	17.5	16	13.5	11
30VR02-2A	4	5.5	20	2	36	33.5	32.5	30.5	29.5	26.5	22.5	18	12.5
30VR02-1A	4	5.5	20	2	42	38.5	37	35.5	34	31.5	27.5	23	18
30VR02-00	5.5	7.5	20	2	48.5	43.5	42.5	41	39.5	36.5	33.5	29	23.5
30VR03-2A	5.5	7.5	20	3	60	54.5	53	50.5	48	44	38	31.5	23.5
30VR03-1A	7.5	10	20	3	66.5	60	58.5	56	54	50	45	38	30
30VR03-00	7.5	10	20	3	73	65	63.5	61	59	55	50	43.5	35.5
30VR04-2A	7.5	10	20	4	84.5	76.5	74	70.5	68	62	55	46	35
30VR04-1A	11	15	20	4	91.5	83	81	78	75.5	70	63	54.5	43.5
30VR04-00	11	15	20	4	98	88	86	83	80.5	75	69	60	49.5
30VR05-2A	11	15	20	5	109.5	99.5	97	93	89.5	83	74	63	49.5
30VR05-1A	11	15	10	5	115.5	104.5	102	98	94.5	88	79.5	68.5	55
30VR05-00	15	20	11	5	122.5	109.5	107	103.5	100	93.5	85.5	75	61.5
30VR06-2A	15	20	11	6	134	121.5	118.5	113.5	109.5	101.5	91	78	61.5
30VR06-1A	15	20	12	6	140	126	123	118.5	114.5	106.5	96.5	83.5	67
30VR06-00	15	20	13	6	146.5	131	128	123.5	119.5	111.5	102	89	73
30VR07-2A	15	20	13	7	158	142.5	139	133.5	128.5	119	107	91.5	72.5
30VR07-1A	15	20	14	7	164	147.5	144	138.5	133.5	124	112.5	97	78
30VR07-00	18.5	25	15	7	171	152.5	149	144	139.5	130	119	103.5	85
30VR08-2A	18.5	25	15	8	182.5	164.5	160	154	148.5	137.5	124	106	84.5
30VR08-1A	18.5	25	15	8	188.5	169	165	159	153.5	142.5	129.5	111.5	90
30VR08-00	18.5	25	15	8	194.5	174	169.5	164	158.5	147.5	134.5	117	95.5
30VR09-2A	22	30	17	9	208.5	188.5	184	177	171	159	144	124.5	100.5
30VR09-1A	22	30	17	9	214.5	193.5	189	182.5	176.5	164.5	150	130	106
30VR09-00	22	30	20	9	221	198	194	187.5	181.5	169.5	155.5	136	112
30VR10-2A	22	30	20	10	233	210	205	197.5	191	177.5	161	139	112
30VR10-1A	22	30	20	10	239	215	210	202.5	196	182.5	166.5	144.5	117.5
30VR10-00	30	40	20	10	246.5	221.5	217	210	203.5	190.5	175	153.5	126.5
30VR11-2A	30	40	20	11	258	233.5	228.5	220.5	213	198.5	180.5	156.5	127
30VR11-1A	30	40	20	11	264.5	238.5	233.5	225.5	218	204	186	162	133
30VR11-00	30	40	20	11	271	243.5	238	230.5	223.5	209	192	168	138.5
30VR12-2A	30	40	20	12	282.5	255.5	249.5	241	233	217	197.5	171	139
30VR12-1A	30	40	20	12	289	260.5	254.5	246	238	222.5	203	177	145
30VR12-00	30	40	20	12	295	265.5	259.5	251	243	227.5	208.5	182.5	150.5
30VR13-2A	30	40	20	13	307	277.5	271	261.5	252.5	235.5	214	185.5	151
30VR13-1A	30	40	20	13	313	282	276	266.5	258	240.5	220	191.5	156.5
30VR13-00	30	40	20	13	319.5	287	280.5	271.5	263	246	225.5	197	162.5

Franklin Electric

30 VR - DIMENSIONS

F-VERSION

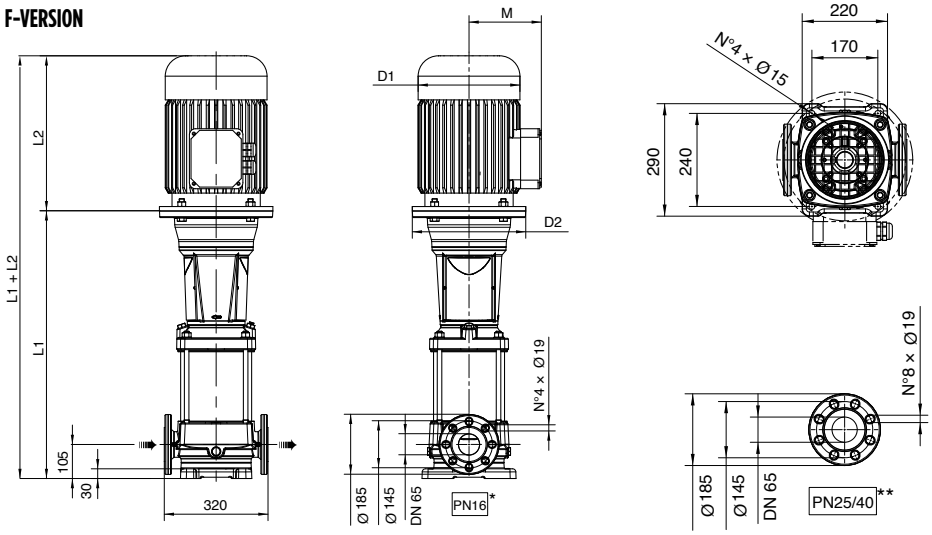

F-Version: Pump is supplied without counter-flanges (optional accessories, including bolts and joints).
*** Position of the holes turned compared to PN16*

Model	Motor				Dimensions (mm)						Weight (kg)		
	Rated Power		Size	MTG	L1	L2	L1 + L2	M	D1	D2	PE	Motor	PMA
	kW	HP											
30VR01-00	2.2	3	90	B14	445	267	712	138	180	170	53	16	69
30VR02-2A	4	5.5	112	B14	537	306	843	145	196	170	57	22.8	80
30VR02-1A	4	5.5	112	B14	724	306	1030	145	196	170	74.5	22.8	97.5
30VR02-00	5.5	7.5	132	B5	724	328	1052	161	225	300	74.5	34	108.5
30VR03-2A	5.5	7.5	132	B5	806	328	1134	161	225	300	78.5	34	112.5
30VR03-1A	7.5	10	132	B5	806	350	1156	161	225	300	78.5	36	114.5
30VR03-00	7.5	10	132	B5	806	350	1238	161	225	300	78.5	36	114.5
30VR04-2A	7.5	10	132	B5	888	350	1333	161	225	300	85.5	36	121.5
30VR04-1A	11	15	160	B5	908	425	1333	198	248	350	85.5	58	143.5
30VR04-00	11	15	160	B5	908	425	1415	198	248	350	85.5	58	143.5
30VR05-2A	11	15	160	B5	990	425	1415	198	248	350	89.5	58	147.5
30VR05-1A	11	15	160	B5	990	425	1415	198	248	350	89.5	58	147.5
30VR05-00	15	20	160	B5	990	476	1548	198	248	350	89.5	64	153.5
30VR06-2A	15	20	160	B5	1072	476	1548	198	248	350	93.5	64	157.5
30VR06-1A	15	20	160	B5	1072	476	1548	198	248	350	93.5	64	157.5
30VR06-00	15	20	160	B5	1072	476	1630	198	248	350	93.5	64	157.5
30VR07-2A	15	20	160	B5	1154	476	1652	198	248	350	97.5	64	161.5
30VR07-1A	15	20	160	B5	1154	476	1630	198	248	350	97.5	64	161.5
30VR07-00	18.5	25	160	B5	1154	542	1696	238	317	350	97.5	89	186.5
30VR08-2A	18.5	25	160	B5	1236	542	1778	238	317	350	101.5	89	190.5
30VR08-1A	18.5	25	160	B5	1236	542	1778	238	317	350	101.5	89	190.5
30VR08-00	18.5	25	160	B5	1236	542	1778	238	317	350	101.5	89	190.5
30VR09-2A	22	30	180	B5	1318	542	1860	238	360	350	105.5	108.7	214
30VR09-1A	22	30	180	B5	1318	542	1860	238	360	350	105.5	108.7	214
30VR09-00	22	30	180	B5	1318	542	1860	238	360	350	105.5	108.7	214
30VR10-2A	22	30	180	B5	1400	542	1942	238	360	350	112.5	108.7	221
30VR10-1A	22	30	180	B5	1400	542	1942	238	360	350	112.5	108.7	221
30VR10-00	30	40	200	B5	1405	658	2063	297	399	400	112.5	228	340.5
30VR11-2A	30	40	200	B5	1487	658	2145	297	399	400	116.5	228	344.5
30VR11-1A	30	40	200	B5	1487	658	2145	297	399	400	116.5	228	344.5
30VR11-00	30	40	200	B5	1487	658	2145	297	399	400	116.5	228	344.5
30VR12-2A	30	40	200	B5	1569	658	2227	297	399	400	120.5	228	348.5
30VR12-1A	30	40	200	B5	1569	658	2227	297	399	400	120.5	228	348.5
30VR12-00	30	40	200	B5	1569	658	2227	297	399	400	120.5	228	348.5
30VR13-2A	30	40	200	B5	1651	658	2309	297	399	400	124.5	228	352.5
30VR13-1A	30	40	-	B5	1651	658	2309	297	399	400	124.5	228	352.5
30VR13-00	30	40	-	B5	1651	658	2309	297	399	400	124.5	228	352.5

30 VR - PERFORMANCE CURVE

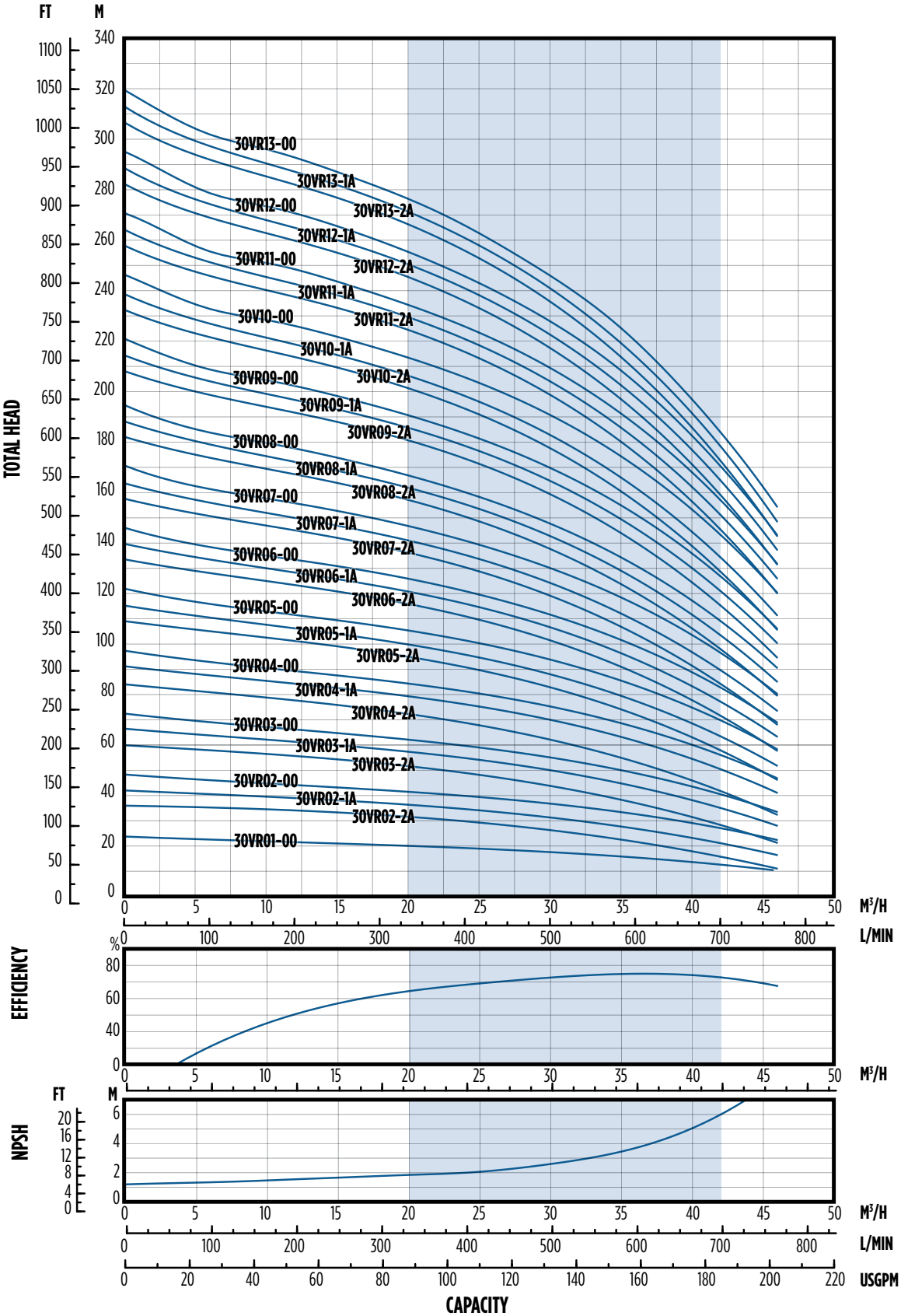

NOTE: Specifications subject to change without prior notice. Hydraulic characteristics are according to ISO standard 9906, Annex A.

Franklin Electric

30 VR - POWER CURVE

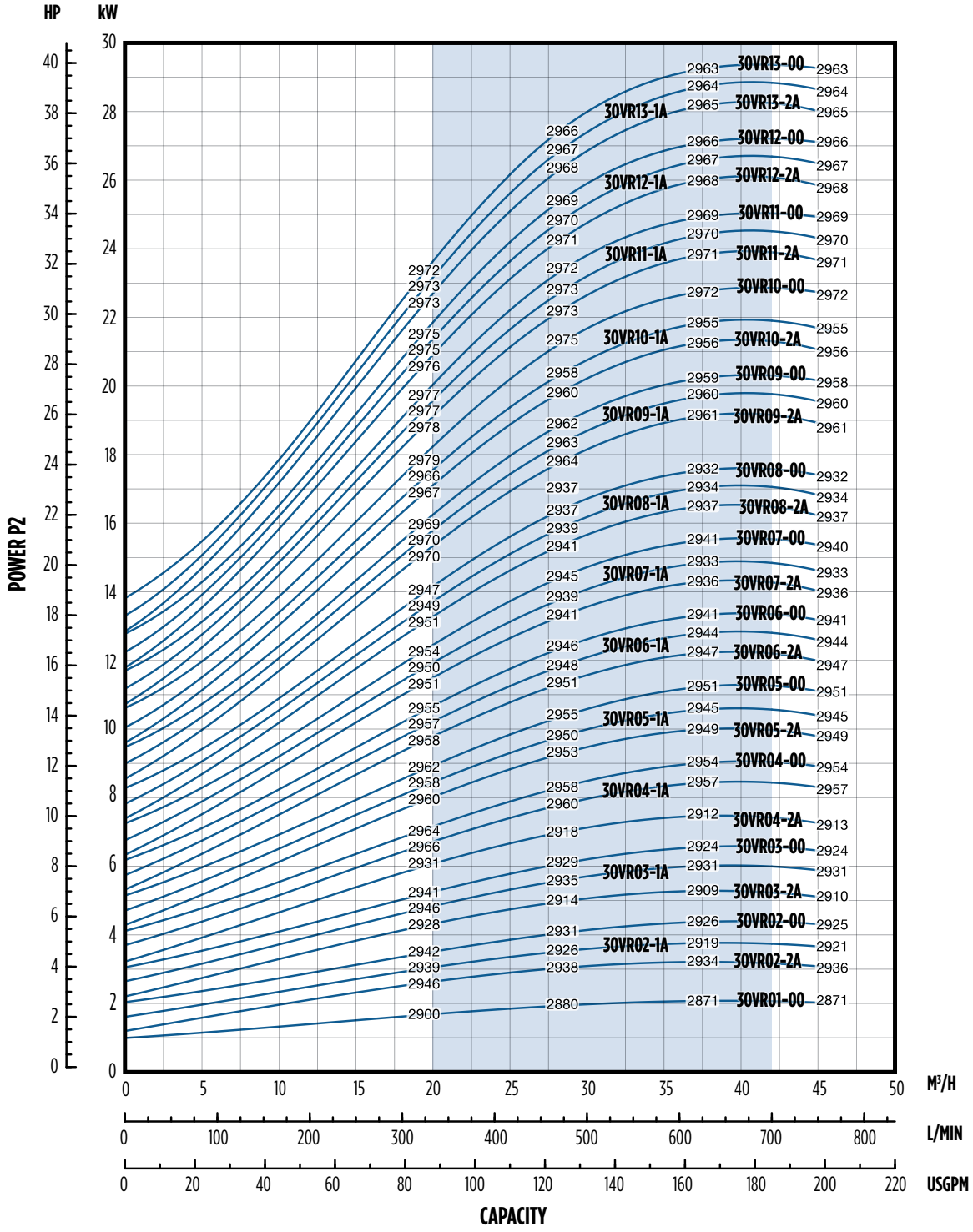

NOTE: Specifications subject to change without prior notice.

45 VR - HYDRAULIC PERFORMANCE

Model	Rated Power		H1	Stages	Delivery											
					l/min - 0	250	300	367	417	500	583	667	750	900	1000	1083
	kW	HP	Bar		m^3/h - 0	15	18	22	25	30	35	40	45	54	60	65
					H = Total Head Column of Water (Meters)											
45VR01-1A	3	4	20	1	19	18.5	18.5	18	18	17.5	16.5	15.5	14.5	11.5	9.5	7.5
45VR01-00	4	5.5	20	1	24.5	24	23.5	23	22.5	22	21.5	21	19.5	17	15.5	13.5
45VR02-2A	5.5	7.5	20	2	38.5	37.5	37	36.5	35.5	34.5	33	31	28.5	23	18.5	14.5
45VR02-00	7.5	10	20	2	48.5	47.5	47	46	45.5	44	43	41.5	39	34	30.5	26.5
45VR03-2A	11	15	20	3	63	62	61.5	60.5	59.5	58	56	53.5	50	42	36	30
45VR03-00	11	15	20	3	73.5	72	71	70	69	67	65.5	63	60	52.5	47	41
45VR04-2A	15	20	8	4	87.5	86	85	83.5	82	80	77.5	74	69.5	59.5	51	43
45VR04-00	15	20	11	4	97.5	96	94.5	93	91.5	89	86.5	84	79.5	69.5	62	54.5
45VR05-2A	18.5	25	11	5	112	109.5	108.5	106.5	105	102	99	94.5	89	76.5	66	56
45VR05-00	18.5	25	14	5	122	119.5	118	115.5	114	111	108	104.5	99	86.5	77	67.5
45VR06-2A	22	30	14	6	137.5	135	133.5	131	129	126	122	117.5	110.5	95.5	83.5	72
45VR06-00	22	30	17	6	147.5	145	143.5	140.5	138.5	135	131.5	127	121	106	95	83.5
45VR07-2A	30	40	17	7	162.5	160	158	155.5	153	149.5	145	139.5	132	115	101	87.5
45VR07-00	30	40	20	7	172.5	170	168	165	162.5	158.5	154.5	149.5	142.5	125.5	112	99
45VR08-2A	30	40	20	8	187	184	182	178.5	176	171.5	167	160.5	152	132	116.5	101
45VR08-00	30	40	20	8	197	194	191.5	188	185.5	181	176.5	170.5	162.5	142.5	127.5	112.5
45VR09-2A	37	50	20	9	211.5	208	205.5	202	199	194	188.5	181.5	172	149.5	132	114.5
45VR09-00	37	50	20	9	221.5	218	215.5	211.5	208	203	198	191.5	182	160	143	126
45VR10-2A	37	50	20	10	235.5	231.5	229	225	221.5	216	210	202	191.5	166.5	147	127.5
45VR10-00	37	50	20	10	246	242	239	234	230.5	225	219	212	201.5	177	158	139
45VR11-2A	45	60	20	11	261	256.5	254	249	245.5	239.5	233	224.5	213	186	164.5	143.5
45VR11-00	45	60	20	11	271	267	263.5	258.5	255	249	242.5	234.5	223.5	196.5	175.5	155
45VR12-2A	45	60	20	12	285.5	280.5	277.5	272.5	268.5	261.5	254.5	245.5	232.5	203	179.5	156.5
45VR12-00	45	60	20	12	295.5	290.5	287.5	282	277.5	271	264	255.5	243	213.5	191	168.5
45VR13-2A	45	60	20	13	309.5	304.5	301	295.5	291	284	276	266	252.5	220.5	195	170

Franklin Electric

45 VR - DIMENSIONS

F-VERSION

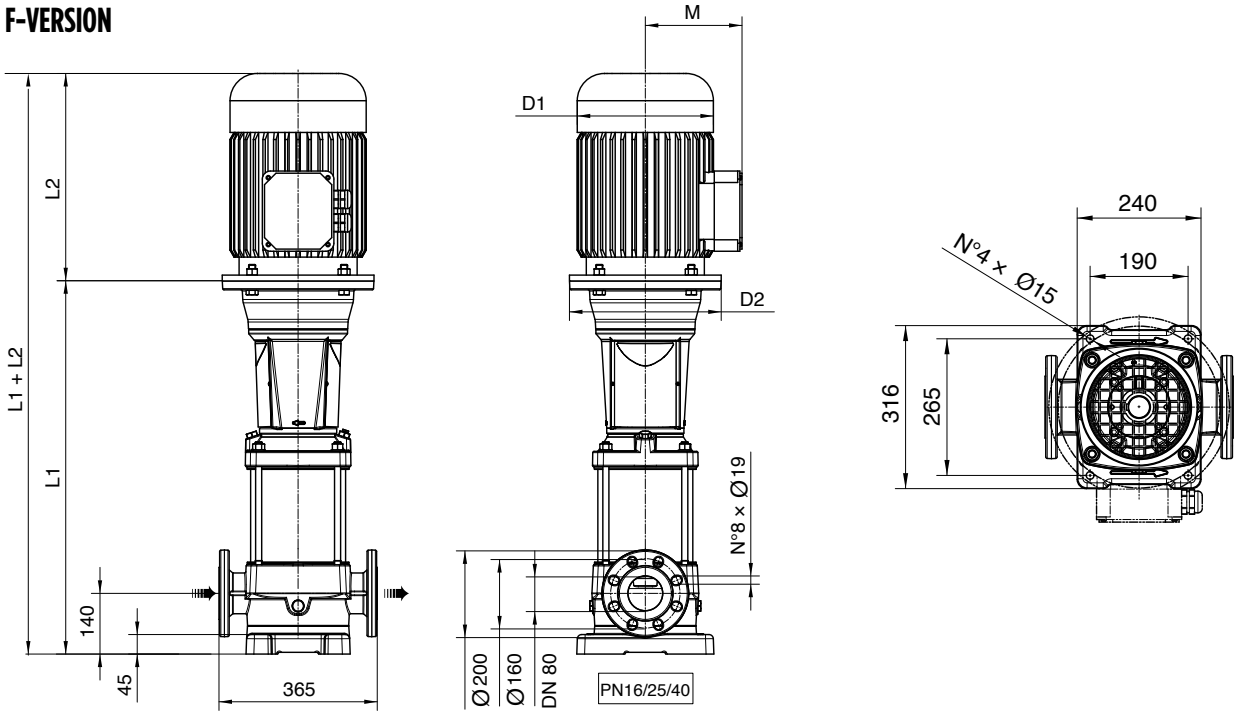

F-Version: Pump is supplied without counter-flanges (optional accessories, including bolts and joints).

Model	Motor				Dimensions (mm)						Weight (kg)		
	Rated Power		Size	MTG	L1	L2	L1 + L2	M	D1	D2	PE	Motor	PMA
	kW	HP											
45VR01-1A	3	4	100	B14	490	267	757	138	180	170	59	18.7	78
45VR01-00	4	5.5	112	B14	490	306	796	145	196	170	59	22.8	82
45VR02-2A	5.5	7.5	132	B5	759	328	1087	161	225	300	80.5	34	114.5
45VR02-00	7.5	10	132	B5	759	350	1109	161	225	300	80.5	36	116.5
45VR03-2A	11	15	160	B5	861	425	1286	198	248	350	87.5	58	145.5
45VR03-00	11	15	160	B5	861	425	1286	198	248	350	87.5	58	145.5
45VR04-2A	15	20	160	B5	943	476	1419	198	248	350	91.5	64	155.5
45VR04-00	15	20	160	B5	943	476	1419	198	248	350	91.5	64	155.5
45VR05-2A	18.5	25	160	B5	1025	542	1567	238	317	350	95.5	89	184.5
45VR05-00	18.5	25	160	B5	1025	542	1567	238	317	350	95.5	89	184.5
45VR06-2A	22	30	180	B5	1107	542	1649	238	317	350	99	108.5	208
45VR06-00	22	30	180	B5	1107	542	1649	238	317	350	99	108.5	208
45VR07-2A	30	40	200	B5	1194	658	1852	297	399	400	106	228	334
45VR07-00	30	40	200	B5	1194	658	1852	297	399	400	106	228	334
45VR08-2A	30	40	200	B5	1276	658	1934	297	399	400	110	228	338
45VR08-00	30	40	200	B5	1276	658	1934	297	399	400	110	228	338
45VR09-2A	37	50	200	B5	1358	658	2016	297	399	400	114	242	356
45VR09-00	37	50	200	B5	1358	658	2016	297	399	400	114	242	356
45VR10-2A	37	50	200	B5	1440	658	2098	297	399	400	118	242	360
45VR10-00	37	50	200	B5	1440	658	2098	297	399	400	118	242	360
45VR11-2A	45	60	225	B5	1522	699	2221	333	465	450	125	308	433
45VR11-00	45	60	225	B5	1522	699	2221	333	465	450	125	308	433
45VR12-2A	45	60	225	B5	1604	699	2303	333	465	450	129	308	437
45VR12-00	45	60		B5	1604	699	2303	333	465	450	129	308	437
45VR13-2A	45	60		B5	1686	699	2385	333	465	450	133	308	441

45 VR - PERFORMANCE CURVE

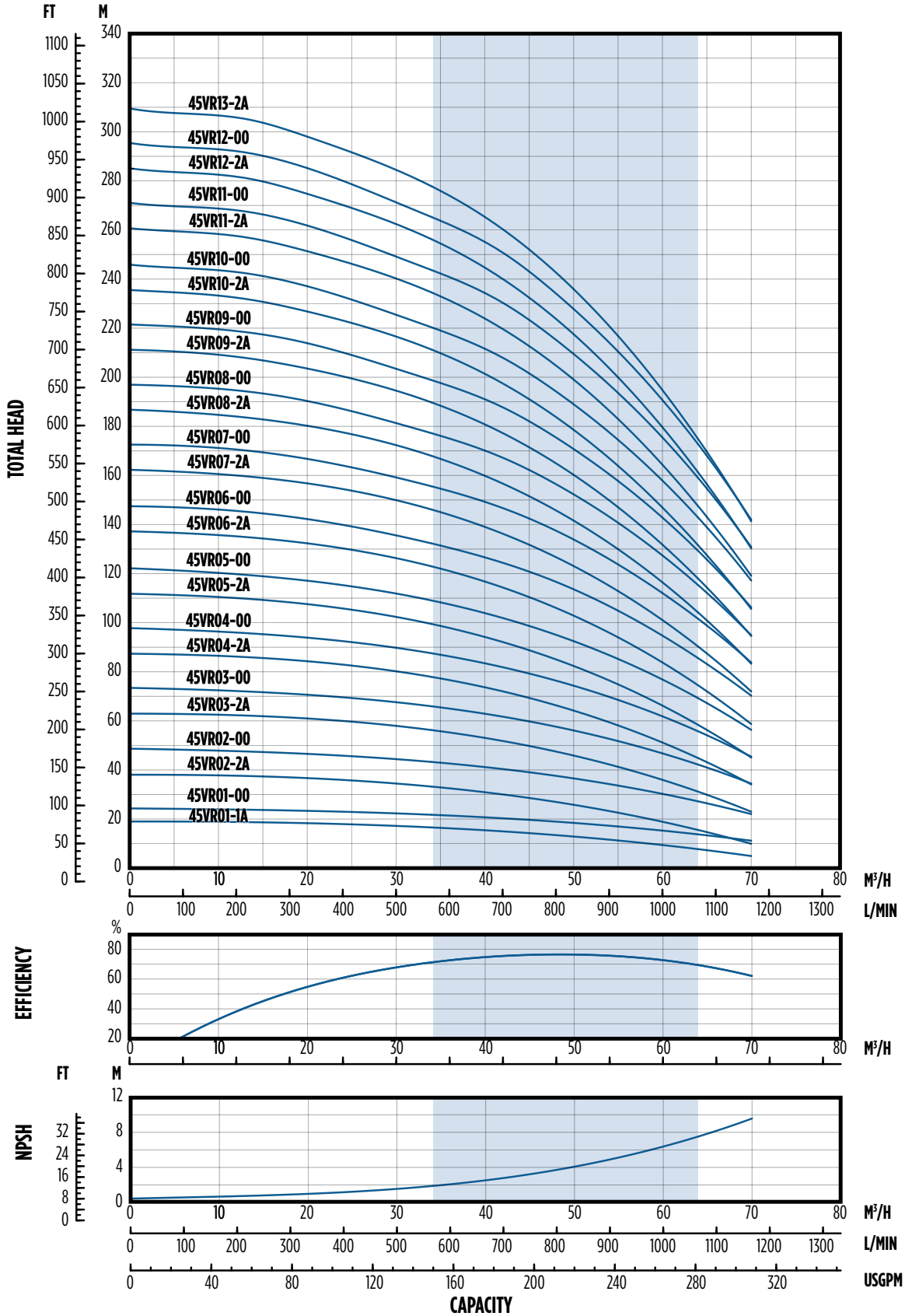

NOTES: Specifications subject to change without prior notice. Hydraulic characteristics are according to ISO standard 9906, Annex A.

Franklin Electric

45 VR - POWER CURVE

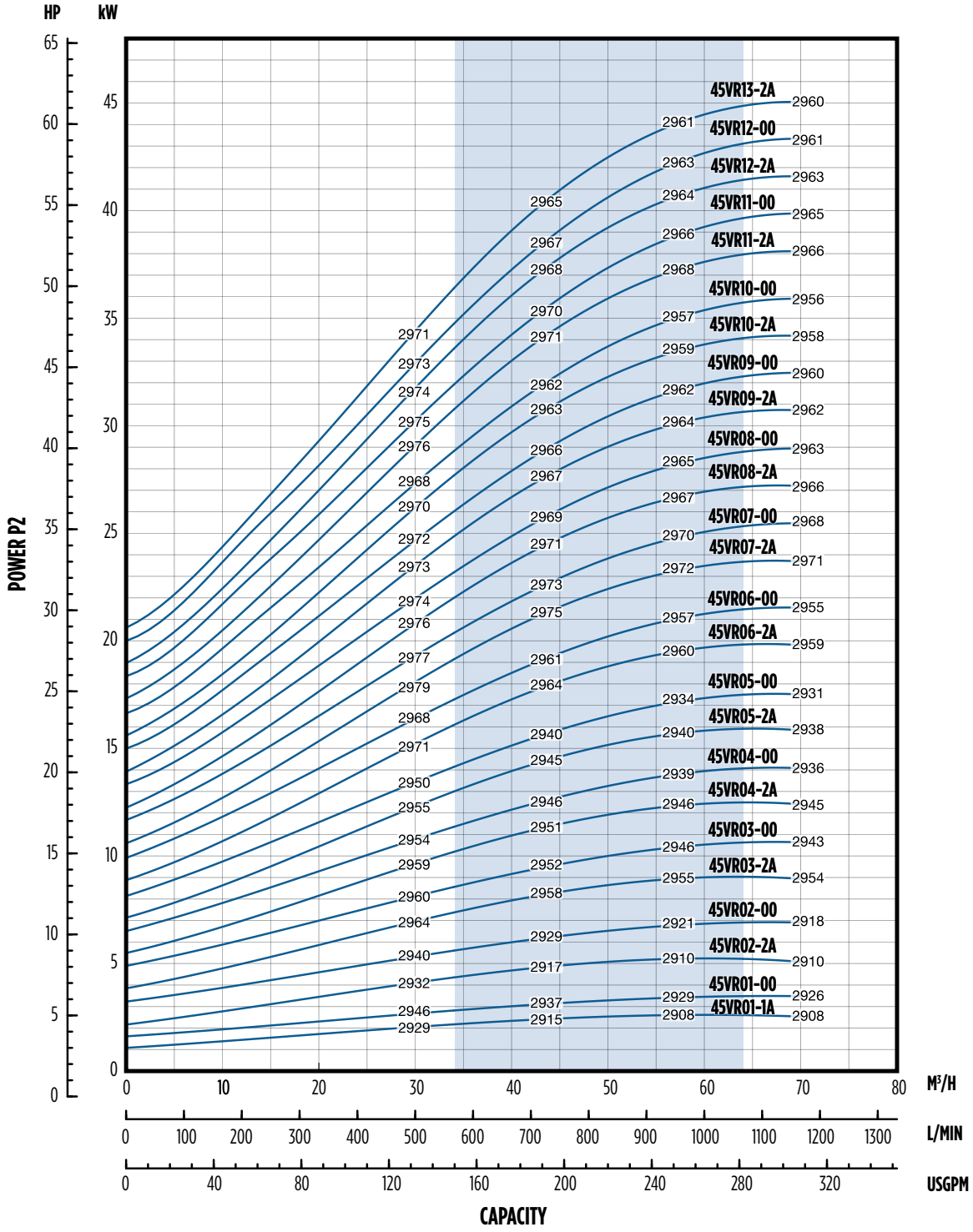

NOTE: Specifications subject to change without prior notice.

65 VR - HYDRAULIC PERFORMANCE

Model	Rated Power		H1	Stages	Delivery									
					l/min - 0	500	600	700	750	900	1000	1200	1300	1417
	kW	HP	Bar		m^3/h - 0	30	36	42	45	54	60	72	78	85
					H = Total Head Column of Water (Meters)									
65VR01-1A	4	5.5		1	19.5	19	18.5	18	17.5	16.5	15.5	12.5	11	9
65VR01-00	5.5	7.5		1	28	25	24.5	24	23.5	22.5	22	20	18.5	16.5
65VR02-2A	7.5	10		2	39	37.5	36.5	35.5	35	33	31	25	22	17.5
65VR02-1A	11	15		2	48	44.5	43.5	42.5	42	40	38.5	34	31	26.5
65VR02-00	11	15		2	56.5	51	49.5	48.5	48	46	45	41	38.5	34.5
65VR03-2A	15	20		3	67.5	63.5	62	60.5	59.5	56.5	54	46.5	42	35.5
65VR03-1A	15	20		3	76	69.5	68	66.5	65.5	62.5	60.5	53.5	49.5	43
65VR03-00	18.5	25		3	84.5	76	74	72.5	71.5	69	67	61.5	57.5	51.5
65VR04-2A	18.5	25		4	95.5	88.5	86	84	83	79	75.5	66	60.5	52
65VR04-1A	22	30		4	105	96	93.5	91.5	90.5	87	84	75.5	70	62
65VR04-00	22	30		4	113.5	102.5	100	97.5	96.5	92.5	90.5	83	78	70
65VR05-2A	30	40	20	5	125	116	113	110.5	109	104.5	101	90	83	72.5
65VR05-1A	30	40		5	133.5	122.5	119	116.5	115	110.5	107.5	97.5	90.5	80.5
65VR05-00	30	40		5	142	129	125.5	122.5	121	116.5	114	105	98.5	88.5
65VR06-2A	30	40		6	153	141.5	137.5	134.5	133	127.5	123	110	102	89.5
65VR06-1A	37	50		6	162	148	144	141	139	133.5	129.5	117.5	109.5	97.5
65VR06-00	37	50		6	170	154	150	147	145	139.5	136	125	117.5	105.5
65VR07-2A	37	50		7	181.5	166.5	162.5	158.5	156.5	150	145	130.5	120.5	106.5
65VR07-1A	37	50		7	189.5	173	168.5	164.5	162.5	156	151.5	138	128.5	114.5
65VR07-00	45	60		7	199	180.5	175.5	172	169.5	163.5	159.5	147	138	124
65VR08-2A	45	60		8	210	193	188	184	181.5	174	168.5	152	141.5	125
65VR08-1A	45	60		8	218.5	199.5	194	190	187.5	180	175	159.5	149	133
65VR08-00	45	60		8	227	206	200	196	193.5	186	181.5	167	157	141

65 VR - DIMENSIONS

F-VERSION

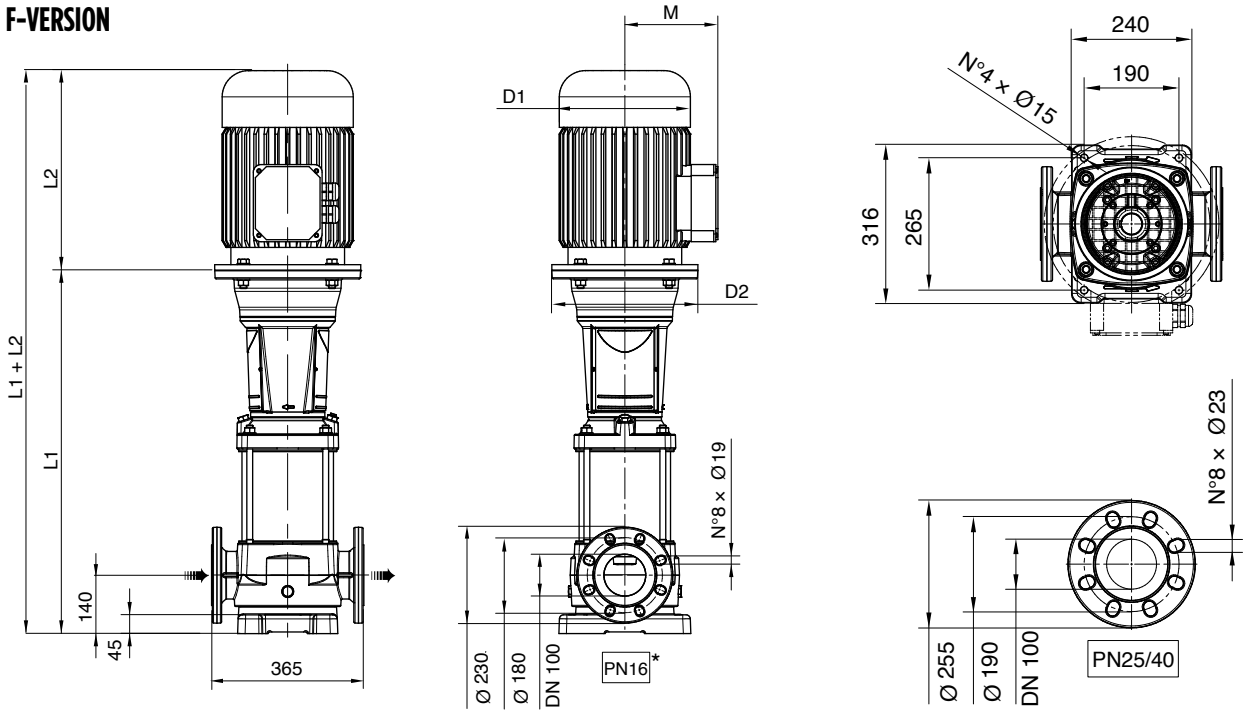

F-Version: Pump is supplied without counter-flanges (optional accessories, including bolts and joints).

Model	Motor				Dimensions (mm)						Weight (kg)		
	Rated Power		Size	MTG	L1	L2	L1 + L2	M	D1	D2	PE	Motor	PMA
	kW	HP											
65VR01-1A	4	5.5	112	B14	550.1	306	856.1	145	196	170	61	22.8	83.8
65VR01-00	5.5	7.5	132	B5	737.1	328	1065.1	161	225	300	81	34	115
65VR02-2A	7.5	10	132	B5	829.2	350	1179.2	161	225	300	85.5	36	121.5
65VR02-1A	11	15	160	B5	849.2	425	1274.2	198	248	350	88.5	58	146.5
65VR02-00	11	15	160	B5	849.2	425	1274.2	198	248	350	88.5	58	146.5
65VR03-2A	15	20	160	B5	941.3	476	1417.3	198	248	350	93	64	157
65VR03-1A	15	20	160	B5	941.3	476	1417.3	198	248	350	93	64	157
65VR03-00	18.5	25	160	B5	941.3	542	1483.3	235	317	350	93	88.9	181.9
65VR04-2A	18.5	25	160	B5	1033.4	542	1575.4	235	317	350	97.5	88.9	186.4
65VR04-1A	22	30	180	B5	1033.4	542	1575.4	238	317	350	98	108.7	206.7
65VR04-00	22	30	180	B5	1033.4	542	1575.4	238	317	350	98	108.7	206.7
65VR05-2A	30	40	200	B5	1130.5	658	1788.5	300	399	400	105.5	228	333.5
65VR05-1A	30	40	200	B5	1130.5	658	1788.5	300	399	400	105.5	228	333.5
65VR05-00	30	40	200	B5	1130.5	658	1788.5	300	399	400	105.5	228	333.5
65VR06-2A	30	40	200	B5	1222.6	658	1880.6	300	399	400	110	228	338
65VR06-1A	37	50	200	B5	1222.6	658	1880.6	300	399	400	110	242	352
65VR06-00	37	50	200	B5	1222.6	658	1880.6	300	399	400	110	242	352
65VR07-2A	37	50	200	B5	1314.7	658	1972.7	300	399	400	114.5	242	356.5
65VR07-1A	37	50	200	B5	1314.7	658	1972.7	300	399	400	114.5	242	356.5
65VR07-00	45	60	225	B5	1314.7	699	2013.7	335	465	450	117.5	308	425.5
65VR08-2A	45	60	225	B5	1406.8	699	2105.8	335	465	450	122	308	430
65VR08-1A	45	60	225	B5	1406.8	699	2105.8	335	465	450	122	308	430
65VR08-00	45	60	225	B5	1406.8	699	2105.8	335	465	450	122	308	430

65 VR - PERFORMANCE CURVE

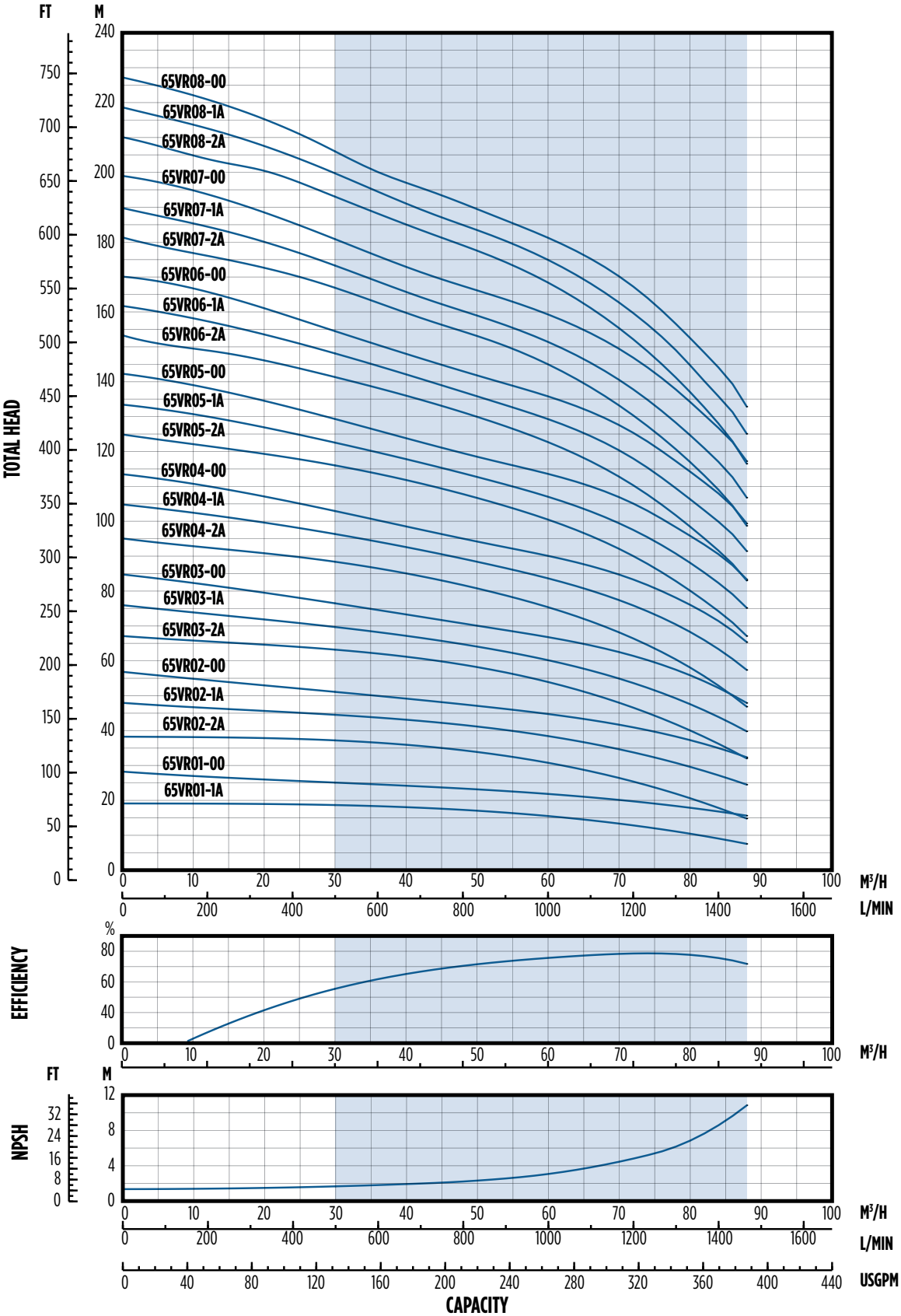

NOTE: Specifications subject to change without prior notice. Hydraulic characteristics are according to ISO standard 9906, Annex A.

Franklin Electric

65 VR - POWER CURVE

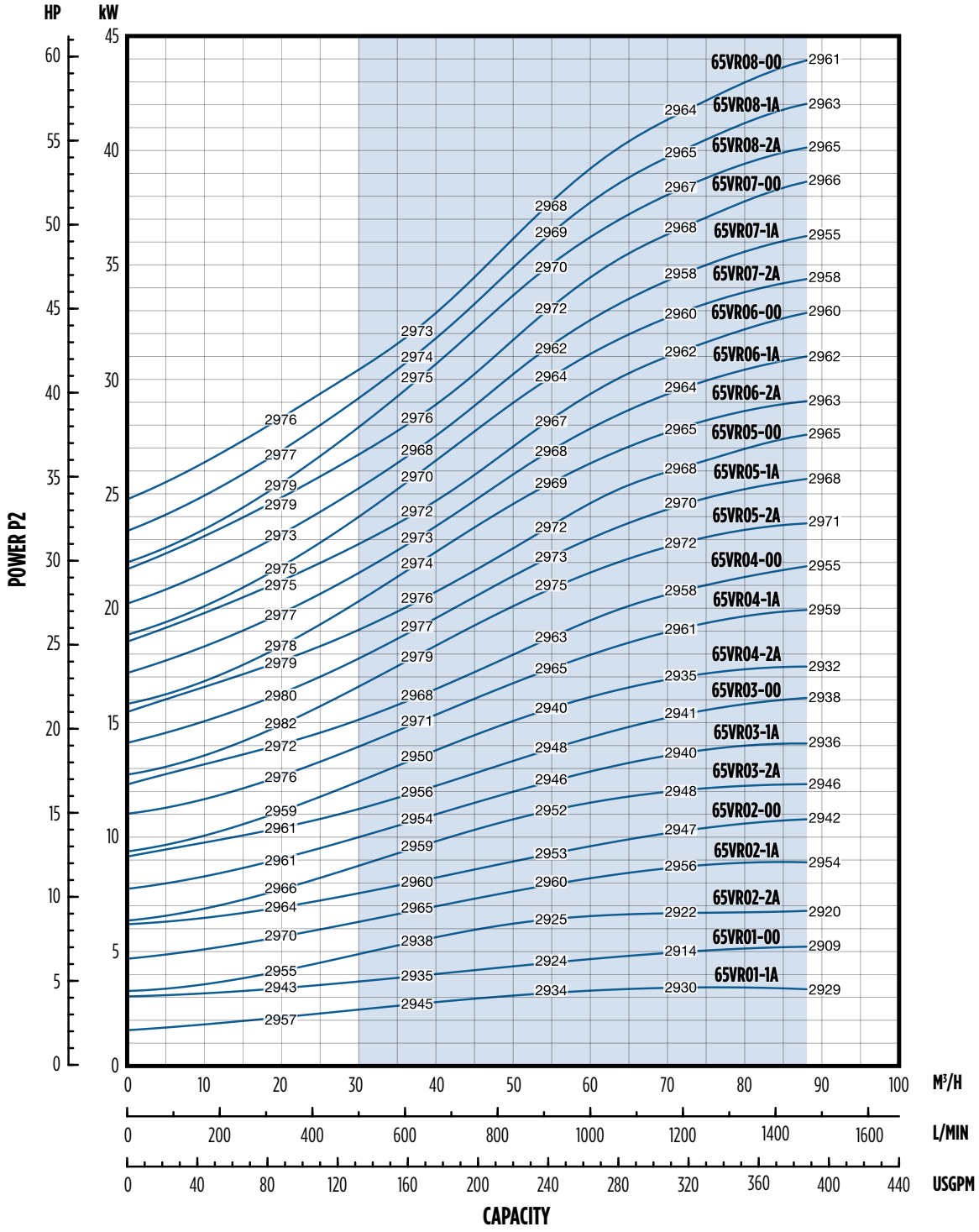

NOTE: Specifications subject to change without prior notice.

95 VR - HYDRAULIC PERFORMANCE

Model	Rated Power		H1	Stages	Delivery									
					l/min - 0	750	900	1000	1200	1300	1417	1600	1800	1967
	kW	HP	Bar		m^3/h - 0	45	54	60	72	78	85	96	108	118
					H = Total Head Column of Water (Meters)									
95VR01-1A	5.5	7.5	20	1	22	21	20.5	20	19	17.5	16.5	13.5	10	6.5
95VR01-00	7.5	10		1	30.5	27.5	26	25.5	24	23.5	22	20	17	13.5
95VR02-2A	11	15		2	44.5	43	42	41	38.5	36.5	34	28.5	21.5	15
95VR02-00	15	20		2	62	55.5	53	51.5	49	47.5	45	41	35	28.5
95VR03-2A	18.5	25		3	75.5	70.5	68	66.5	62.5	59.5	56	48.5	38.5	28.5
95VR03-00	22	30		3	93.5	84	80.5	78	74	72	69	62.5	53.5	44
95VR04-2A	30	40		4	108	100	97	94.5	89	85.5	81	71.5	59	46
95VR04-00	30	40		4	125.5	112.5	108	105	99.5	96.5	92.5	84	72	60
95VR05-2A	37	50		5	139	127.5	123.5	120	113.5	109	103.5	92	76	60
95VR05-00	37	50		5	156	140	134.5	130.5	123.5	120	114.5	104.5	89	74
95VR06-2A	45	60		6	170.5	156	150.5	146.5	138.5	134	127	113.5	94.5	75.5
95VR06-00	45	60		6	188	169	161.5	157	149	144.5	138.5	126	108	89.5

Franklin Electric

95 VR - DIMENSIONS

F-VERSION

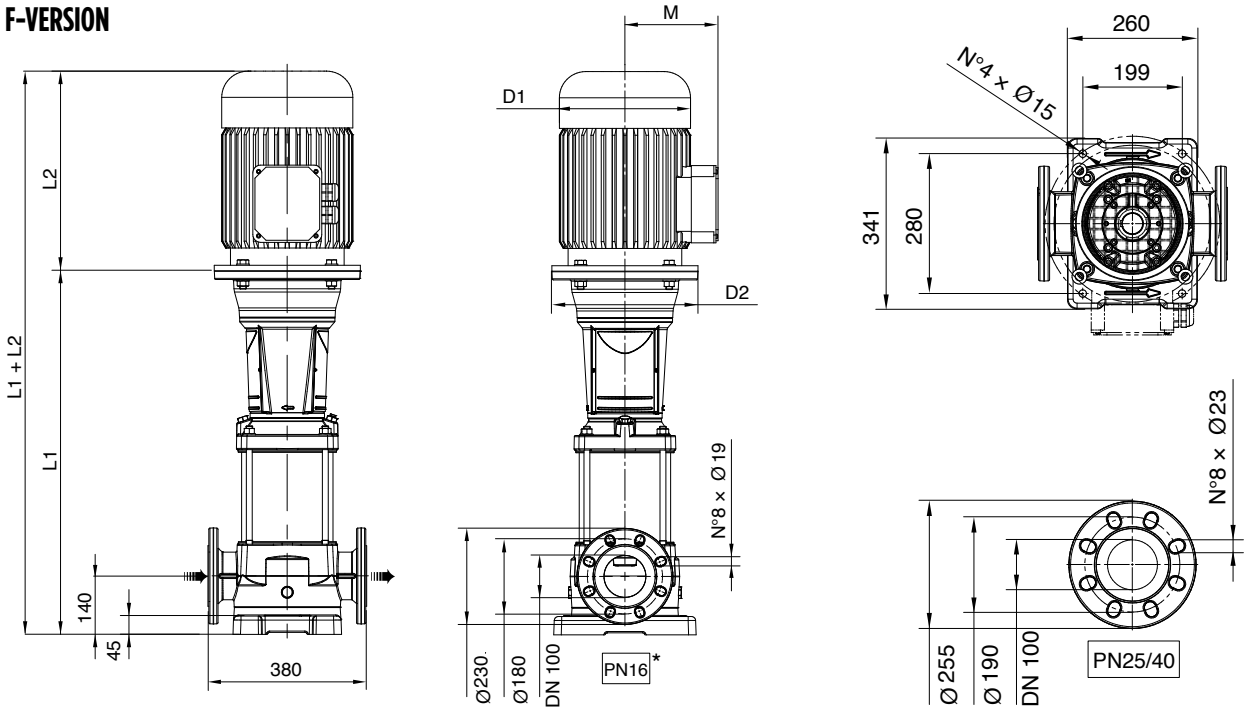

F-Version: Pump is supplied without counter-flanges (optional accessories, including bolts and joints).

Model	Motor				Dimensions (mm)						Weight (kg)		
	Rated Power		Size	MTG	L1	L2	L1 + L2	M	D1	D2	PE	Motor	PMA
	kW	HP											
95VR01-1A	5.5	7.5	132	B5	737.1	328	1065.1	161	225	300	82.5	34	116.5
95VR01-00	7.5	10	132		737.1	350	1087.1	161	225	300	82.5	36	118.5
95VR02-2A	11	15	160		849.2	425	1274.2	198	248	350	89	58	147
95VR02-00	15	20	160		849.2	476	1325.2	198	248	350	89	64	153
95VR03-2A	18.5	25	160		941.3	542	1483.3	235	317	350	93	88.9	181.9
95VR03-00	22	30	180		941.3	542	1483.3	238	317	350	93	108.7	201.7
95VR04-2A	30	40	200		1038.4	658	1696.4	300	399	400	100	228	328
95VR04-00	30	40	200		1038.4	658	1696.4	300	399	400	100	228	328
95VR05-2A	37	50	200		1130.5	658	1788.5	300	399	400	104	242	346
95VR05-00	37	50	200		1130.5	658	1788.5	300	399	400	104	242	346
95VR06-2A	45	60	225		1222.6	699	1921.6	335	465	450	110.5	308	418.5
95VR06-00	45	60	225		1222.6	699	1921.6	335	465	450	110.5	308	418.5

95 VR - PERFORMANCE CURVE

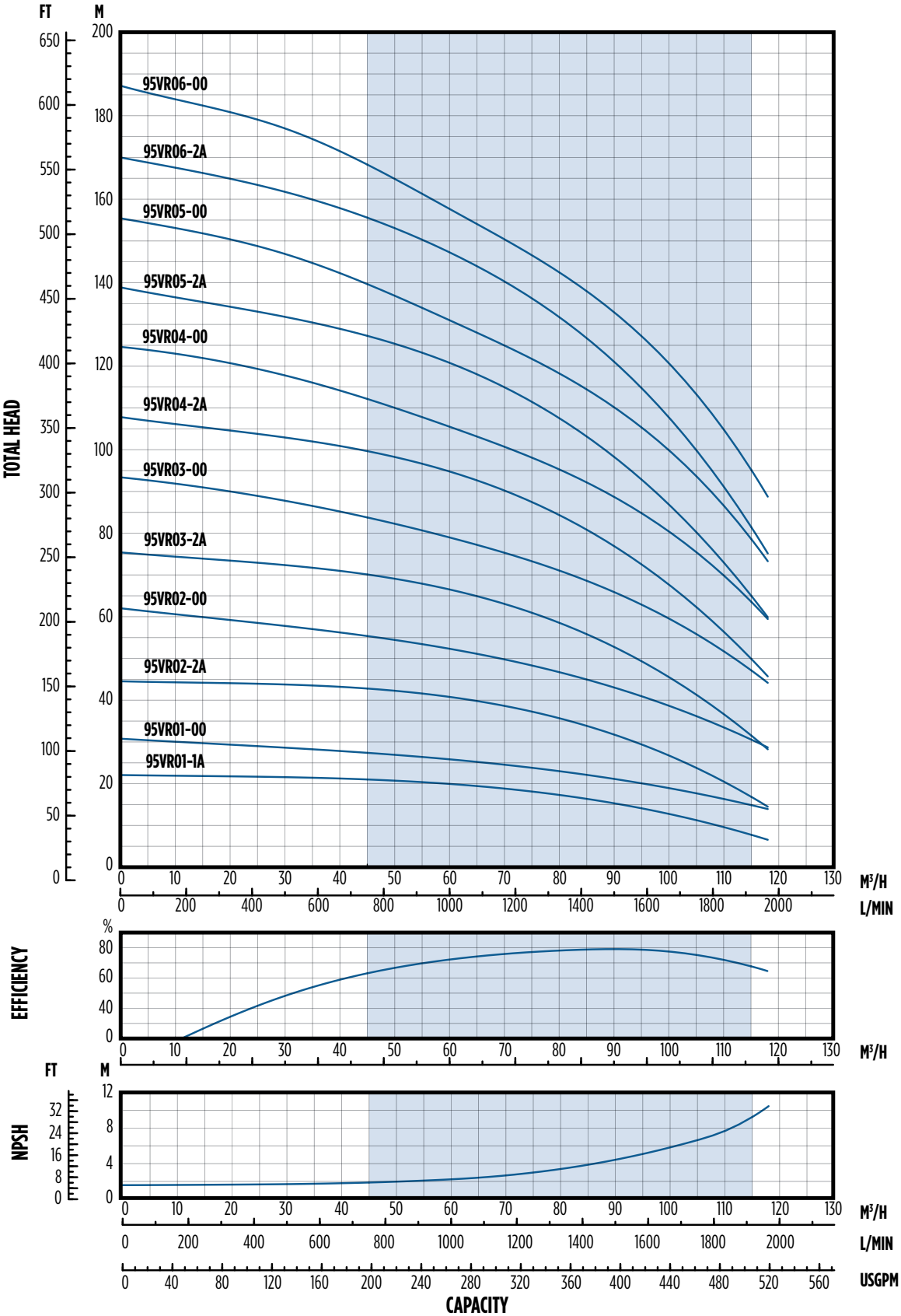

NOTE: Specifications subject to change without prior notice. Hydraulic characteristics are according to ISO standard 9906, Annex A.

Franklin Electric

95 VR - POWER CURVE

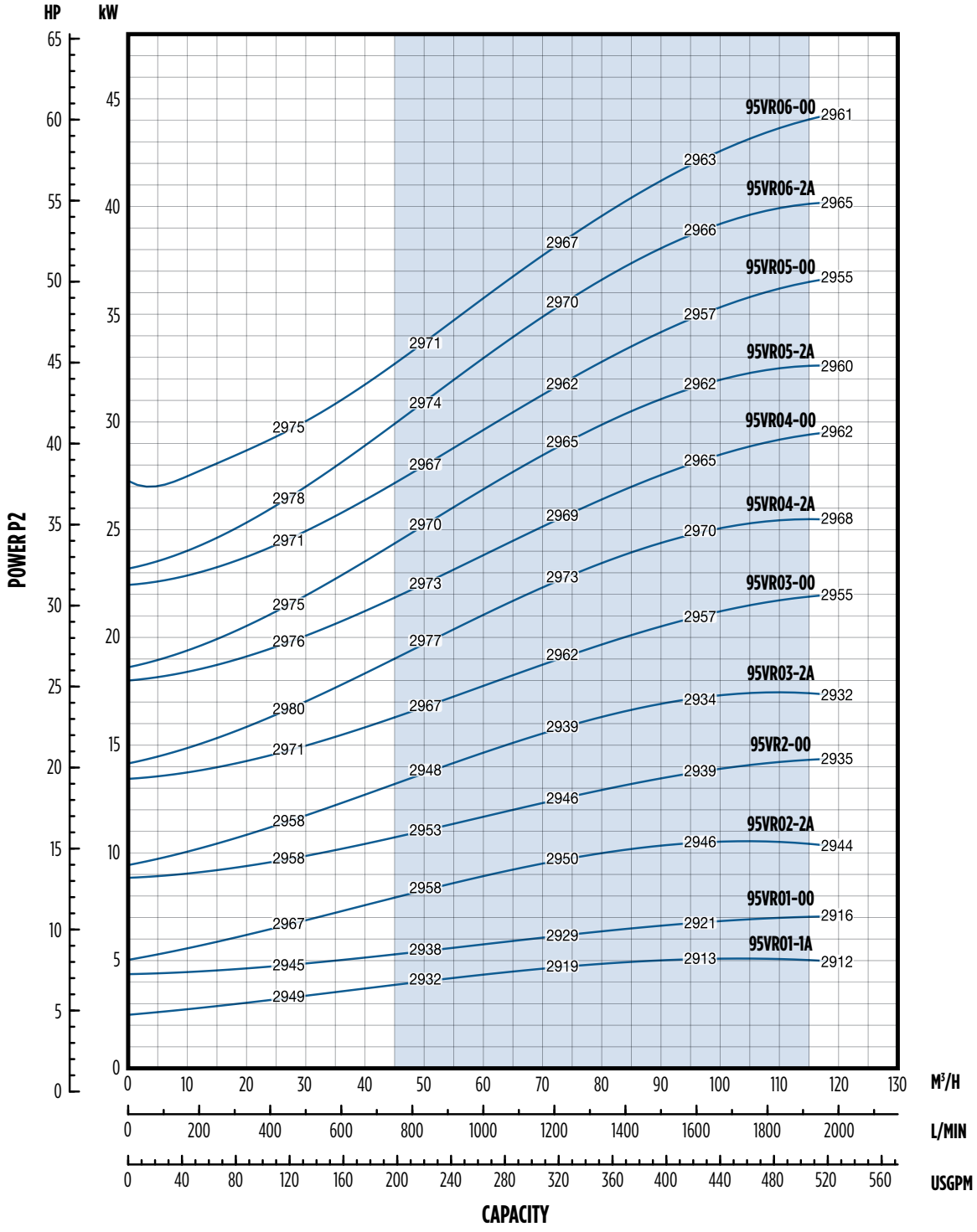

NOTE: Specifications subject to change without prior notice.

1-3-6-10 VR - MATERIALS

Ref. No.	Part Description	Material						
		Type	G - Standard Version		H - 304 SS Version		N - 316 SS Version	
			ASTM/AISI	DIN / EN	ASTM/AISI	DIN / EN	ASTM/AISI	DIN / EN
10.00	Pump Casing	Stainless Steel	-	-	CF 8 / AISI 304	1.4308	CF 8M / AISI 316	1.4408
10.02	Filling and Draining Plug	Stainless Steel	-	-	AISI 304	1.4301	AISI 316	1.4401
20.00	Outer Case	Stainless Steel	-	-	AISI 304	1.4301	AISI 316	1.4401
20.01	Mechanical Seal Housing	Stainless Steel	-	-	AISI 304	1.4301	AISI 316	1.4401
20.05	Filling Plugs	Stainless Steel	-	-	AISI 304	1.4301	AISI 316	1.4401
30.00	Pump Shaft	Stainless Steel	-	-	AISI 304	1.4301	AISI 316	1.4401
30.01	Kit Mechanical Seal	Silicon Carbide SiC, Graphite, EPDM, Stainless Steel	-	-	-	-	-	-
30.02	Mechanical Seal Fastening Kit	Stainless Steel	-	-	AISI 304	1.4301	AISI 316	1.4401
30.03	Kit O-rings	EPDM	-	-	-	-	-	-
40.00	Stage Housing and Diffuser	Stainless Steel	-	-	AISI 304	1.4301	AISI 316	1.4401
40.01	Stage Centering Outlet	Stainless Steel	-	-	AISI 304	1.4301	AISI 316	1.4401
40.02	Floating Neck Ring	PPS	-	-	-	-	-	-
40.03	Initial Stage Housing	Stainless Steel	-	-	AISI 304	1.4301	AISI 316	1.4401
40.04	Last Stage w/Diffuser	Stainless Steel	-	-	AISI 304	1.4301	AISI 316	1.4401
40.05	Stage Centering Inlet	Stainless Steel	-	-	AISI 304	1.4301	AISI 316	1.4401
40.06	Stage Housing and Diffuser w/Bearing	Stainless Steel, Tungsten Carbide WC	-	-	AISI 304	1.4301	AISI 316	1.4401
50.00	Impeller	Stainless Steel	-	-	AISI 304	1.4301	AISI 316	1.4401
50.01	Impeller Spacer	Stainless Steel	-	-	AISI 304	1.4301	AISI 316	1.4401
50.02	Intermediary Sleeve	Tungsten Carbide WC	-	-	-	-	-	-
50.03	Intermediary Sleeve Spacer	Stainless Steel	-	-	AISI 304	1.4301	AISI 316	1.4401

Franklin Electric

1-3-6-10 VR - MAIN COMPONENTS

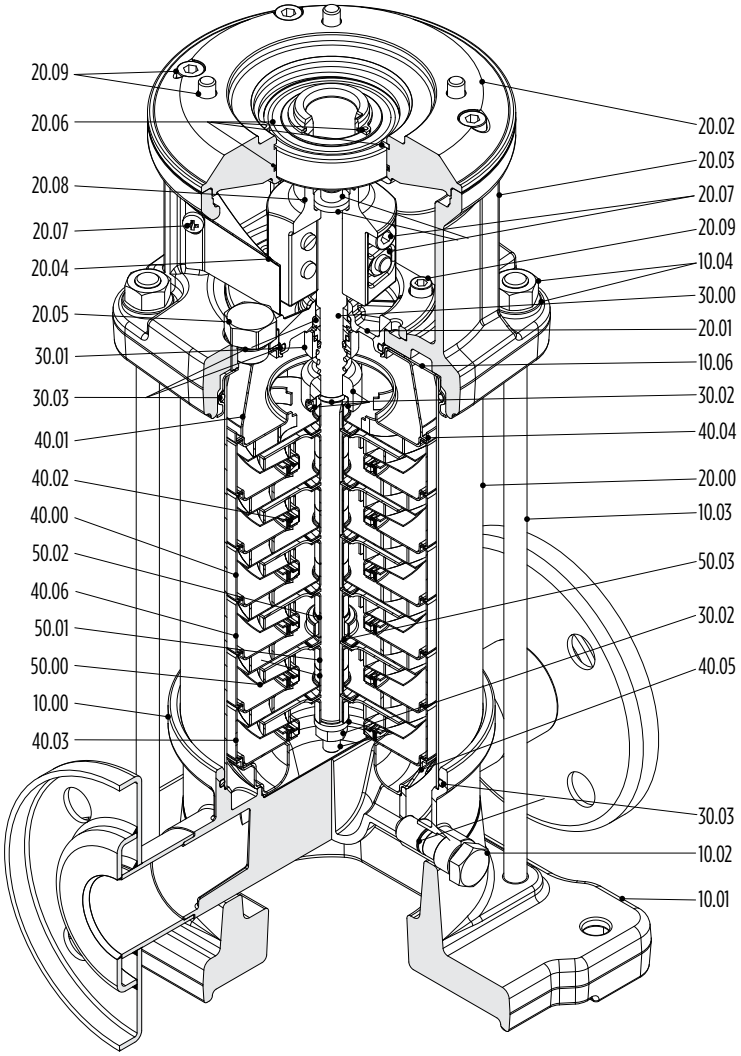

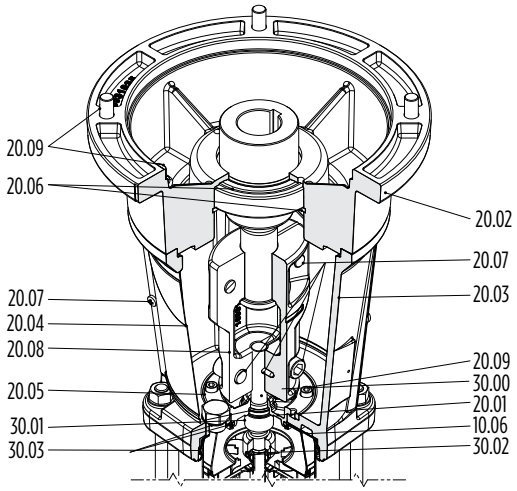

Ref. No.	Description
10.00	Pump Casing
10.01	Pump Fixing Plate
10.02	Filling and Draining Plug
10.03	Tie Bolt
10.04	Kit Nuts and Washers
10.06	Upper Flange
20.00	Outer Case
20.01	Mechanical Seal Housing
20.02	Motor Flange
20.03	Motor Bracket
20.04	Coupling Guard
20.05	Filling Plugs
20.06	Circlips and Bearings, and O-ring
20.07	Coupling Fasteners
20.08	Coupling
20.09	Kit Motor Screws

Ref. No.	Description
30.00	Pump Shaft
30.01	Kit Mechanical Seal
30.02	Mechanical Seal Fastening Kit
30.03	Kit O-rings
40.00	Stage Housing and Diffuser
40.01	Stage Centering Outlet
40.02	Floating Neck Ring
40.03	Initial Stage Housing
40.04	Last Stage with Diffuser
40.05	Stage Centering Inlet
40.06	Stage Housing and Diffuser with Bearing
50.00	Impeller
50.01	Impeller Spacer
50.02	Intermediary Sleeve
50.03	Intermediary Sleeve Spacer

15-20 VR - MATERIALS

Ref. No.	Part Description	Material				
		Type	G - Standard Version		N - 316 SS Version	
			ASTM/AISI	DIN / EN	ASTM/AISI	DIN / EN
10.00	Pump Casing	Stainless Steel	-	-	CF 8M / AISI 316	1.4408
10.02	Filling and Draining Plug	Stainless Steel	-	-	AISI 316	1.4401
10.06	Upper Flange	Stainless Steel	-	-	CF 8M / AISI 316	1.4408
20.00	Outer Case	Stainless Steel	-	-	AISI 316	1.4401
20.01	Mechanical Seal Housing	Stainless Steel	-	-	CF 8M / AISI 316	1.4408 / 1.4401
20.05	Filling Plugs	Stainless Steel	-	-	AISI 316	1.4401
30.00	Pump Shaft	Stainless Steel	-	-	AISI 316	1.4401
30.01	Kit Mechanical Seal	Silicon Carbide SiC, Graphite, EPDM, Stainless Steel	-	-	-	-
30.02	Mechanical Seal Fastening Kit	Stainless Steel	-	-	AISI 316	1.4401
30.03	Kit O-rings	EPDM	-	-	-	-
40.00	Stage Housing and Diffuser	Stainless Steel	-	-	AISI 316	1.4401
40.01	Stage Centering Outlet	Stainless Steel	-	-	AISI 316	1.4401
40.02	Floating Neck Ring	PTFE	-	-	-	-
40.03	Initial Stage Housing	Stainless Steel	-	-	AISI 316	1.4401
40.04	Last Stage w/Diffuser	Stainless Steel	-	-	AISI 316	1.4401
40.06	Stage Housing and Diffuser w/Bearing	Stainless Steel, Tungsten Carbide WC	-	-	AISI 316	1.4401
50.00	Impeller	Stainless Steel	-	-	AISI 316	1.4401
50.01	Impeller Spacer	Stainless Steel	-	-	AISI 316	1.4401
50.02	Intermediary Sleeve	Tungsten Carbide WC	-	-	-	-
50.03	Intermediary Sleeve Spacer	Stainless Steel	-	-	AISI 316	1.4401

Franklin Electric

15-20 VR - MAIN COMPONENTS

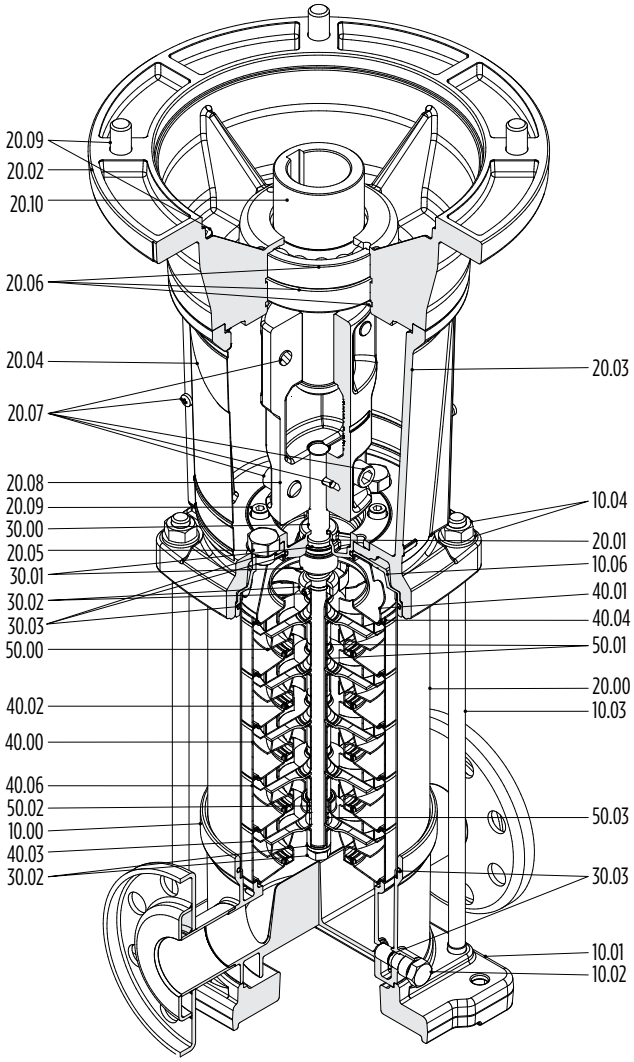

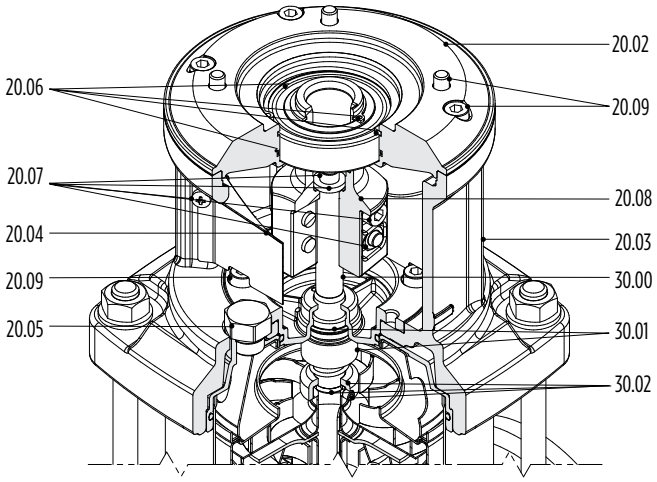

Ref. No.	Description
10.00	Pump Casing
10.01	Pump Fixing Plate
10.02	Filling and Draining Plug
10.03	Tie Bolt
10.04	Kit Nuts and Washers
10.06	Upper Flange
20.00	Outer Case
20.01	Mechanical Seal Housing
20.02	Motor Flange
20.03	Motor Bracket
20.04	Coupling Guard
20.05	Filling Plugs
20.06	Circlips and Bearings, and O-ring
20.07	Coupling Fasteners
20.08	Coupling
20.09	Kit Motor Screws

Ref. No.	Description
20.10	Motor Shaft Adapter
30.00	Pump Shaft
30.01	Kit Mechanical Seal
30.02	Mechanical Seal Fastening Kit
30.03	Kit O-rings
40.00	Stage Housing and Diffuser
40.01	Stage Centering Outlet
40.02	Floating Neck Ring
40.03	Initial Stage Housing
40.04	Last Stage with Diffuser
40.06	Stage Housing and Diffuser with Bearing
50.00	Impeller
50.01	Impeller Spacer
50.02	Intermediary Sleeve
50.03	Intermediary Sleeve Spacer

30-45-65-95 VR - MATERIALS

Ref. No.	Part Description	Material						
		Type	G - Standard Version		H - 304 SS Version		N - 316 SS Version	
			ASTM/AISI	DIN / EN	ASTM/AISI	DIN / EN	ASTM/AISI	DIN / EN
10.00	Pump Casing	Cast Iron (G Ver.) / Stainless Steel (H/N Ver.)	A48 Class 35	GJL-250	CF 8M / AISI 316	1.4408	CF 8M / AISI 316	1.4408
10.02	Draining Plug	Stainless Steel	AISI 304	1.4301	AISI 304	1.4301	AISI 316	1.4401
10.06	Upper Flange	Cast Iron (G Ver.) / Stainless Steel (H/N Ver.)	CF 8 / AISI 304	1.4308	CF 8M / AISI 316	1.4408	CF 8M / AISI 316	1.4408
20.00	Outer Case	Stainless Steel	AISI 304	1.4301	AISI 304	1.4301	AISI 316	1.4401
20.01	Mechanical Seal Housing	Stainless Steel	CF 8 / AISI 304	1.4308	CF 8 / AISI 304	1.4308	CF 8M / AISI 316	1.4408
20.05	Filling Plugs	Stainless Steel	AISI 304	1.4301	AISI 304	1.4301	AISI 316	1.4401
30.00	Pump Shaft	Stainless Steel	AISI 431	1.4057	AISI 431	1.4057	AISI 329	1.4460
30.01	Kit Mechanical Seal	Silicon Carbide SiC, Graphite, EPDM, Stainless Steel	-	-	-	-	-	-
30.02	Mechanical Seal Fastening Kit	Stainless Steel	AISI 316	1.4401	AISI 316	1.4401	AISI 316	1.4401
30.03	Kit O-rings	EPDM	-	-	-	-	-	-
40.00	Stage Housing and Diffuser	Stainless Steel / Graphite	AISI 304	1.4301	AISI 304	1.4301	AISI 316	1.4401
40.01	Stage Centering Outlet	Stainless Steel	CF 8 / AISI 304	1.4308	CF 8 / AISI 304	1.4308	CF 8M / AISI 316	1.4408
40.02	Floating Neck Ring	PTFE	-	-	-	-	-	-
40.05	Stage Centering Inlet	Stainless Steel	AISI 316	1.4401	AISI 316	1.4401	AISI 316	1.4401
40.06	Stage Housing and Diffuser w/Bearing	Stainless Steel	AISI 304	1.4301	AISI 304	1.4301	AISI 316	1.4401
40.07	Flange Clamping Neck Ring	Stainless Steel	AISI 304	1.4301	AISI 304	1.4301	AISI 316	1.4401
40.08	Spring Ring	Stainless Steel	AISI 316	1.4401	AISI 316	1.4401	AISI 316	1.4401
50.00	Impeller	Stainless Steel	AISI 304	1.4301	AISI 304	1.4301	AISI 316	1.4401
51.01	Split Cone	Stainless Steel	AISI 304	1.4301	AISI 304	1.4301	AISI 316	1.4401
51.02	Intermediary Sleeve Nut	Stainless Steel, Tungsten Carbide WC	AISI 316	1.4401	AISI 316	1.4401	AISI 316	1.4401
51.03	Journal Sleeve	Stainless Steel, Tungsten Carbide WC	AISI 316	1.4401	AISI 316	1.4401	AISI 316	1.4401
51.04	Split Cone Nut	Stainless Steel	AISI 304	1.4301	AISI 304	1.4301	AISI 316	1.4401
51.05	Intermediate Impeller w/Screw	Stainless Steel	AISI 304	1.4301	AISI 304	1.4301	AISI 316	1.4401

Franklin Electric

30-45-65-95 VR - MAIN COMPONENTS

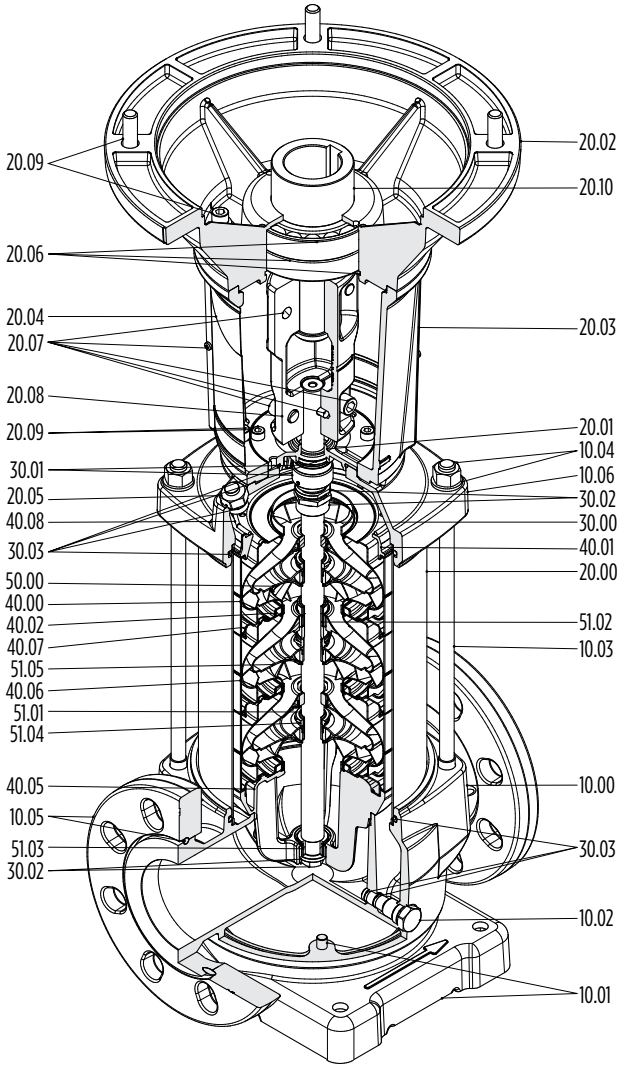

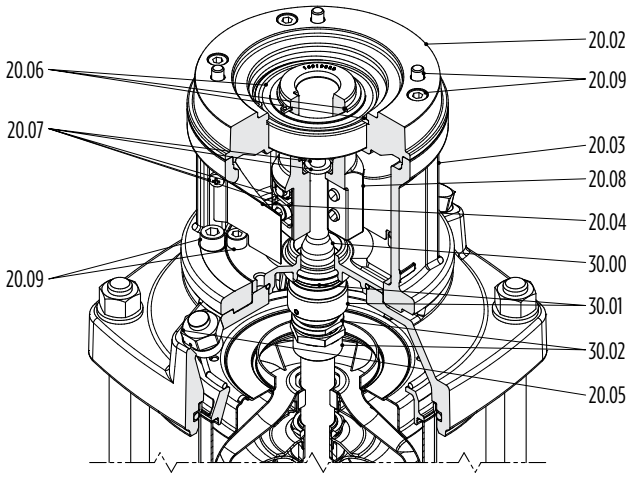

Ref. No.	Description
10.00	Pump Casing
10.01	Pump Fixing Plate
10.02	Draining Plug
10.03	Tie Bolt
10.04	Kit Nuts and Washers
10.05	Kit Flanges Ring
10.06	Upper Flange
20.00	Outer Case
20.01	Mechanical Seal Housing
20.02	Motor Flange
20.03	Motor Bracket
20.04	Coupling Guard
20.05	Filling Plugs
20.06	Circlips and Bearings, and O-ring
20.07	Coupling Fasteners
20.08	Coupling
20.09	Kit Motor Screws
20.10	Motor Shaft Adapter

Ref. No.	Description
30.00	Pump Shaft
30.01	Kit Mechanical Seal
30.02	Mechanical Seal Fastening Kit
30.03	Kit O-rings
40.00	Stage Housing and Diffuser
40.01	Stage Centering Outlet (only on 65/95 VR)
40.02	Floating Neck Ring
40.05	Stage Centering Inlet
40.06	Stage Housing and Diffuser with Bearing
40.07	Flange Clamping Neck Ring
40.08	Spring Ring
50.00	Impeller
51.01	Split Cone
51.02	Intermediary Sleeve Nut
51.03	Journal Sleeve
51.04	Split Cone Nut
51.05	Intermediate Impeller with Screw

SPECIFICATIONS - MECHANICAL SEALS

VERSION U* (UNBALANCED)

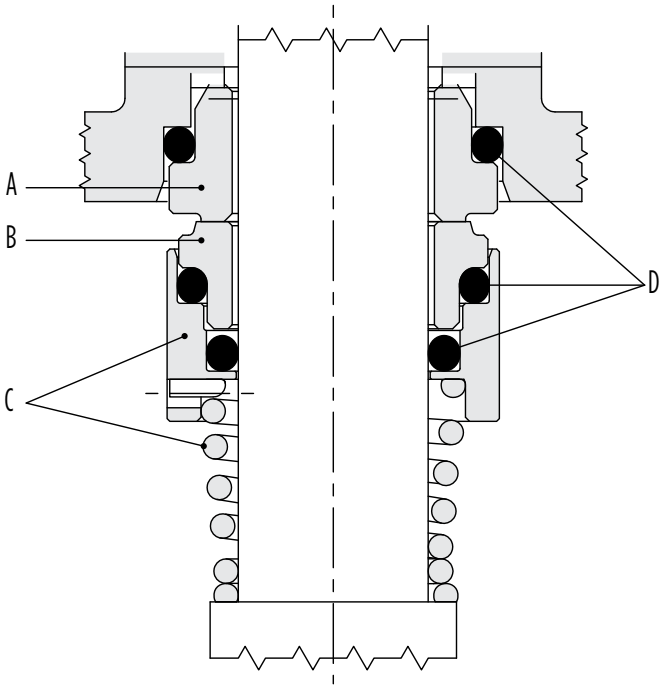

1-3-6-10-15-20 VR

VERSION B (BALANCED)

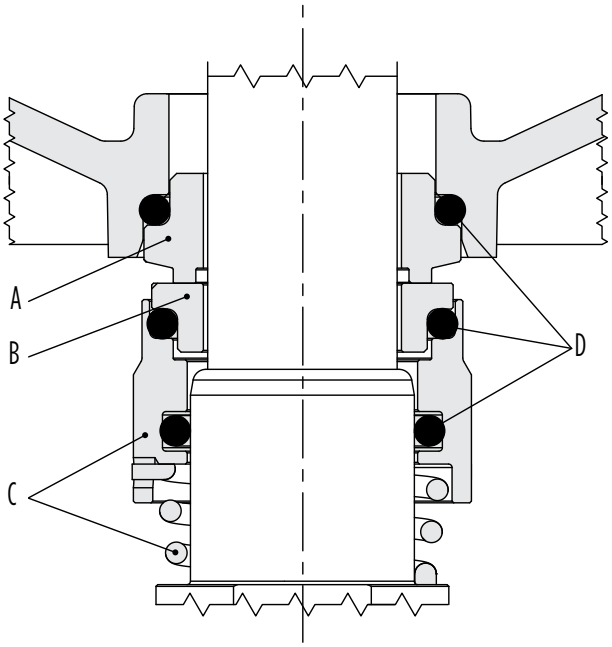

30-45-65-95 VR

** Balanced mechanical seal available upon request*

Model	Version				Position				Temperature
					A	B	C	D	
					Stationary Part	Rotating Part	Other Components	Elastomers	
E1	B	Q1	G	E	Graphite	Silicon Carbide	AISI 316	EPDM	-30 °C + 120 °C
E2**	Q1	Q1	G	E	Silicon Carbide	Silicon Carbide		EPDM	-10 °C + 120 °C
V3**	Q1	Q1	G	V	Silicon Carbide	Silicon Carbide		FKM	-10 °C + 120 °C
V4**	B	Q1	G	V	Graphite	Silicon Carbide		FKM	-10 °C + 120 °C
E5**	U	U	G	E	Tungsten Carbide	Tungsten Carbide		EPDM	-10 °C + 120 °C

*** Non-inventory item available upon request - special-order requests from the factory have longer lead times*

Type	Material
B	Graphite
E	EPDM
G	AISI 316
Q1	Silicon carbide
V	FKM
U	Tungsten carbide

SPECIFICATIONS - FLUIDS/MATERIALS COMPATIBILITY

Liquid (Aqueous Solutions)	Concentration %	Temperature Min./Max.	Models		
			G	I	N
Acetic Acid	10 - 40	+18 +70	-	E1	E1
Aluminum Sulfate	10 - 25	+5 +50	-	-	E2
Ammonia in Water	25	-20 +50	-	E1	E1
Ammonium Sulfate	10	+5 +60	-	-	E2
Benzoic Acid	4	+20 +80	-	V4	V4
Caustic Soda	25	+5 +70	-	E2	E2
Chloroform	100	-10 +30	-	V4	V4
Citric Acid	5	+5 +70	-	E1	E1
Copper Sulfate	1 - 20	+5 +30	-	-	V3
Deionized/Demineralized Water	100	+5 +110	-	E1	E1
Diathermic Oil	100	+90 +120	V4	V4	V4
Emulsion Oil/Water	10 - 50	+15 +90	V4	V4	V4
Ethylene Glycol	10 - 30	+18 +120	-	E1	E1
Ferrous/Ferric Sulfate	10	+5 +30	-	-	E1
Formic Acid	5	+5 +25	-	E1	E1
Glycerine	100	+90 +120	E1	E1	E1
Hydrochloric Acid	2 Max.	+5 +25	-	-	V3
Mineral Oil	100	+90 +120	V4	V4	V4
Nitric Acid	40	+5 +30	-	V3	V3
Perchloroethylene	100	-10 +30	V4	V4	V4
Phosphates/Polyphosphates	10	+5 +90	-	-	E1
Phosphoric Acid	5	+5 +30	-	-	E1
Propylene Glycol	30	-10 +100	V3	V3	V3
Sea Water	Max. 35,000 RPM	+2 +60	-	-	E1
Sodium Bicarbonate (Baking Soda)	6	+5 +60	-	-	E1
Sodium Hypochlorite	1	+5 +25	-	-	V3
Sodium Nitrate	10	+5 +60	E1	-	E1
Sodium Sulfate	15	+5 +40	E2	E2	E2
Sulphuric Acid	2	+5 +25	-	-	V4
Tannic Acid	20	+5 +50	-	-	E1
Tartaric Acid	50	+5 +25	-	V3	V3
Trichlorethylene	100	-10 +40	V4	V4	V4
Vegetable Oil	100	+70 +110	E1	E1	E1
Water	100	+5 +120	E1	E1	E1

NOTE: The values above are intended to serve as a general guide. It is important to consider the specific working conditions, in particular, the concentration of the liquid to be pumped, the specific weight of the liquid, and/or the viscosity, and the temperature and pressure of the liquid. All of these conditions are relevant for the motor and pump performance. When pumping dangerous liquids, it is recommended to take safety precautions. For more details, contact Franklin Electric's customer service.

SPECIFICATIONS - COUNTER-FLANGE DIMENSIONS

Description	DN	Dimensions (mm)					Holes		PN
		D	D1	K	L	B	D2	N°	
Oval	32	99	RP 1-¼"	75	33	8	11	2	16
	32	99	NPT 1-¼"	75	33	8	11	2	16
	40	130	RP 1-½"	100	35	10	13	2	16
	40	130	NPT 1-½"	100	35	10	13	2	16
	50	130	RP 2"	100	39	10	13	2	16
	50	130	NPT 2"	100	39	10	13	2	16
Round Threaded*	25	115	RP 1"	85	43	16	14	4	25
	25	115	NPT 1"	85	43	16	14	4	25
	32	140	RP 1-¼"	100	43	16	18	4	25
	32	140	NPT 1-¼"	100	43	16	18	4	25
	40	150	RP 1-½"	110	43	16	18	4	25
	40	150	NPT 1-½"	110	43	16	18	4	25
	50	165	RP 2"	127	43	18	19	8	25
	50	165	NPT 2"	127	43	18	19	8	25
	65	185	RP 2-½"	145	32	18	18	8	16
	65	185	NPT 2-½"	145	32	18	18	8	16
	80	200	RP 3"	160	34	20	18	8	16
	80	200	NPT 3"	160	34	20	18	8	16
	100	220	RP 4"	180	40	20	18	8	16
	100	220	NPT 4"	180	40	20	18	8	16
Welding Round*	65	185	77.5	145	-	22	18	8	25/40
	80	200	90.5	160	-	24	18	8	25/40
	100	235	116	190	-	26	22	8	25/40

NOTE: Kit round counter-flanges available on request; AISI 304 (oval); DN 25-32-40-50 galvanized steel, AISI 304, AISI 316L; DN 65-80-100: galvanized steel, AISI 316 (round threaded); AISI 316 (welding round)

** According to EN 1092-1*

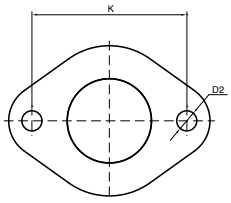

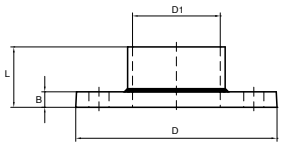

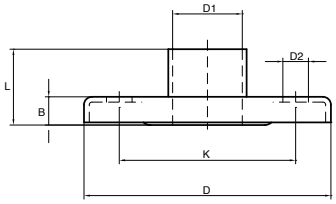

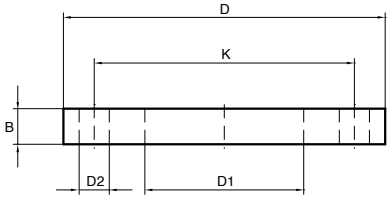

Franklin Electric

MINIMUM EFFICIENCY INDEX (MEI)

ACCORDING TO COMMISSION REGULATION (EU) NO 547/2012

In order to achieve a comparable efficiency threshold-value across all legally covered water pumps, an index of pump size, specific speed, and rotational speed has been created: the MEI (Minimum Efficiency Index).

MEI covers best point (BEP), part load (PL), and overload (OL) efficiencies as water pumps may be chosen with safety margins and hence do not run at best efficiency point.

This ensures high and flat efficiency curves and consequently an efficient operation in real life. MEI means the dimensionless scale unit for hydraulic pump efficiency at BEP, PL, and OL. MEI is a measure for the quality of a pump size in respect to the efficiency.

The higher the value of the MEI, the better is the pump size in respect to efficiency and the lower is the yearly energy consumption if pumps of this size are installed.

The upper limit of values of the MEI is principally open and depends only on physical and technological constraints. MEI is based on the full impeller diameter.

The operation of this water pump with variable duty points may be more efficient and economic when controlled, for example, by the use of a variable speed drive that matches the pump duty to the system.

The efficiency of a pump with a trimmed impeller is usually lower than that of a pump with the full impeller diameter. The trimming of the impeller will adapt the pump to a fixed duty point, leading to reduced energy consumption. The minimum efficiency index (MEI) is based on the full impeller diameter. For benchmark efficiency graphs, go to www.europump.org/efficiencycharts.

Benchmark MEI $\geq$ 0.70.

ASEAN

Franklin Electric (SEA) Pte. Ltd.
17 Changi Business Park Central 1
06-05, Honeywell Building
Singapore 486 073

Phone: +65.6789.6865
Fax: +65.6789.0155

AUSTRALIA / NEW ZEALAND

Franklin Electric (Australia) Pty. Ltd.
106 - 110 Micro Circuit
Dandenong South, Victoria 3175
Australia

Phone: +61.3.9799.5000
Fax: +61.3.9799.5050
Hotline: 1.300 FRANKLIN (1.300.372.655)

CHINA

Franklin Electric (Shanghai) Co. Ltd.
Unit 1002-03, Shanghai Central Plaza
No. 227, Huang Pi Bei Road
Shanghai 200003, China

Phone: +86.21.6327.0909
Fax: +86.21.6327.0910

JAPAN

Franklin Electric International, Inc.
Aoba Bldg. 4F
1-14-7, Sugamo
Toshima-Ku, Tokyo 170-0002, Japan

Phone: +81.3.5319.1251
Fax: +81.3.5319.1252

INDIA

Franklin Electric India Pvt. Ltd.
DBS-206, 1st Floor
World Trade Tower
Barakhamba Avenue
New Delhi 110 001, India

Phone: +91.11.4308.4697
Fax: +91.11.2341.4740

LATIN AMERICA

Motores Franklin S.A. de C.V.
Avenida Churubusco #1600
(Bodega #16)
Col. Francisco I. Madero
Monterrey, N.L.
Mexico C.P. 64560

Phone: +52.81.8000.1000
Fax: +52.818.864.8445

KOREA

Franklin Electric B.V. Korea
Room 502 (BangBaeDong, BangBae The O Superium#1)
3-4 SeoCho-Daero
SeoCho-Gu, Seoul 137-974
Republic of Korea

Phone: +82.2.3473.3353
Fax: +82.2.3473.3352

UNITED STATES

Franklin Electric Co., Inc.
9255 Coverdale Road
Fort Wayne, Indiana 46809 USA

Phone: +1.260.824.2900
Fax: +1.260.824.2909

